Amana LG8519L2 (BOM: PLG8519L2) 10 - HEATER BOX ASSY ORIGINALLY ON ELEC DRYER

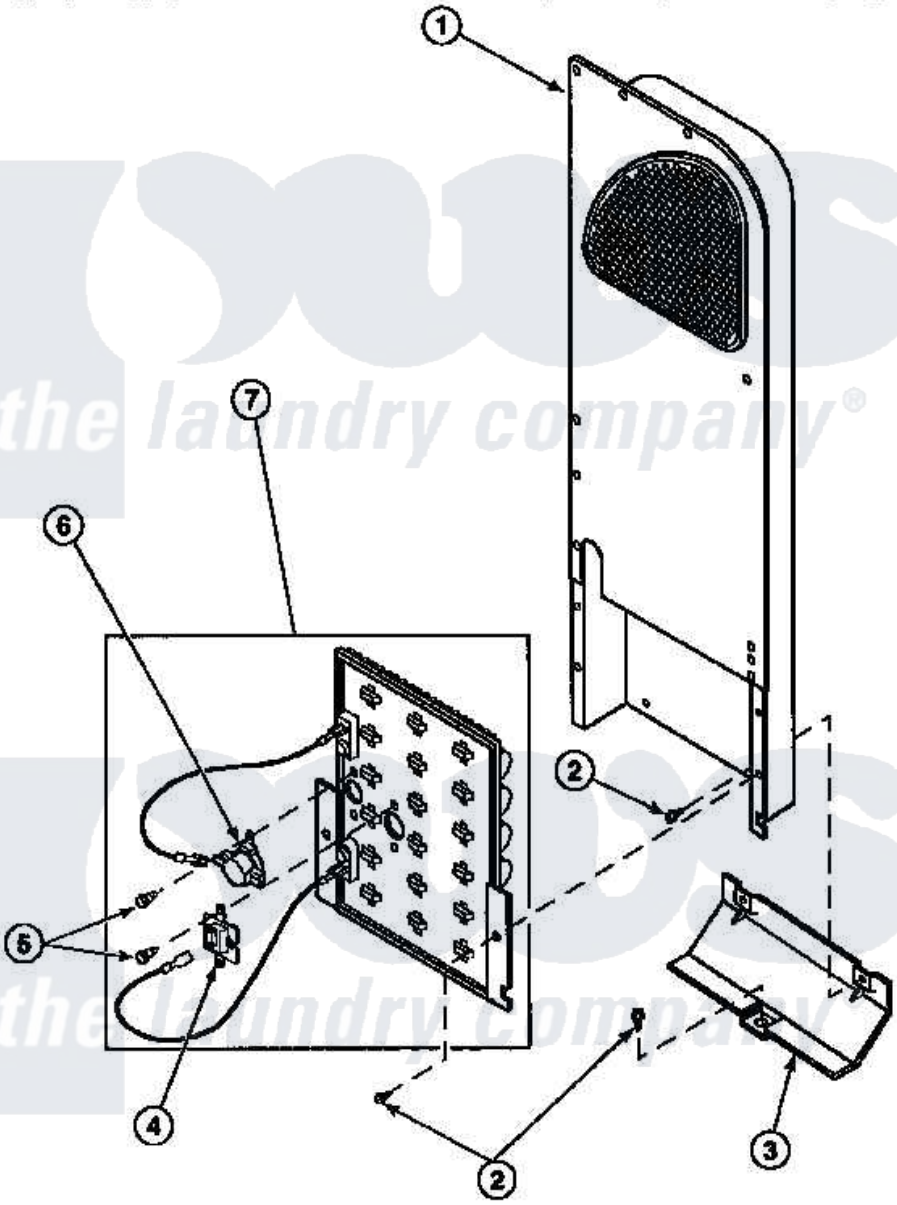

Amana Residential Amana LG8519L2 (BOM: PLG8519L2) Dryer Parts Parts Diagram 10 - HEATER BOX ASSY ORIGINALLY ON ELEC DRYER
Click on the part number to view part

Item	Original Part Number	Replaced By	Status	Part Description
1	500179P	503605		Assembly, Heater Duct
2	501668	503688		Screw, 10B-16 X .34 I
3	60952		Not Available	SHIELD,HEAT DUCT
5	23222	3177991		Screw