Amana LGA60AL (BOM: PLGA60AL) 05 - GAS VALVE, IGNITER & GAS CONVERSION KITS

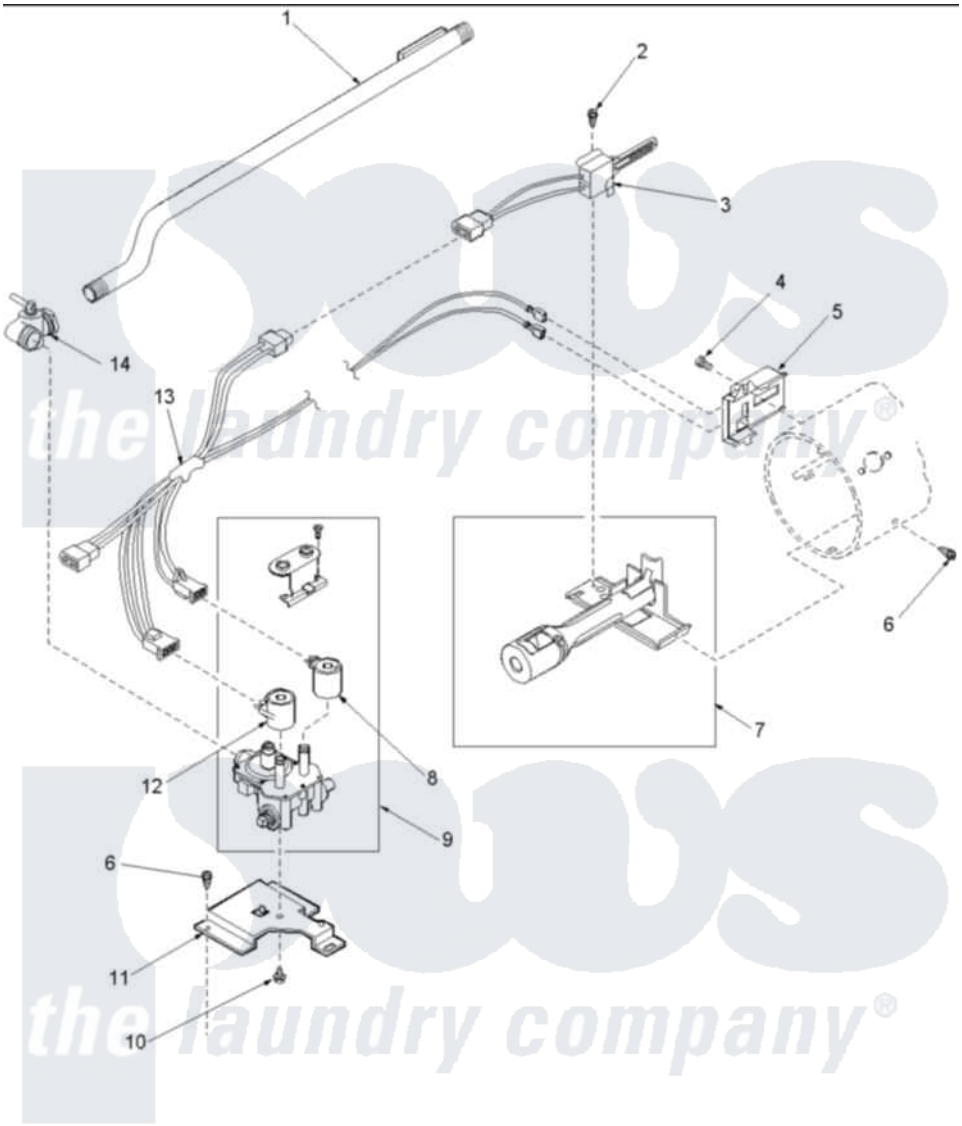

Amana Residential Amana LGA60AL (BOM: PLGA60AL) Dryer Parts Parts Diagram 05 - GAS VALVE, IGNITER & GAS CONVERSION KITS
Click on the part number to view part

Item	Original Part Number	Replaced By	Status	Part Description
1	500647	510204		Pipe
2	51782		Not Available	SCREW, 6B-20X5/16
3	503604	37001308		Ignitor
4	23222	3177991		Screw
5	Y56231	338906		Radiant, Sensor
7	Y56234	37001304		Burner Ign
8	58804B	694540		Coil, 60 Hz
9	Y504091			Assembly, Valve-Gas-Single
10	56124	3370225		Screw
11	500821			Bracket, Mounting-Gas
12	58804A	306106		Coil, Holding And Booster--W
13	60641	37001007		Harness, Wire
14	Y56229	510205		Valve-Elbo
NI	650P3			Kit, Gas Burner Conversion
"	649P3	LPK1		LP Gas Con

the laundry company®

the laundry company®

the laundry company®