Amana LGA60AL (BOM: PLGA60AL) 08 - REAR BULKHEAD, ROLLERS & AIR DUCT ASSY

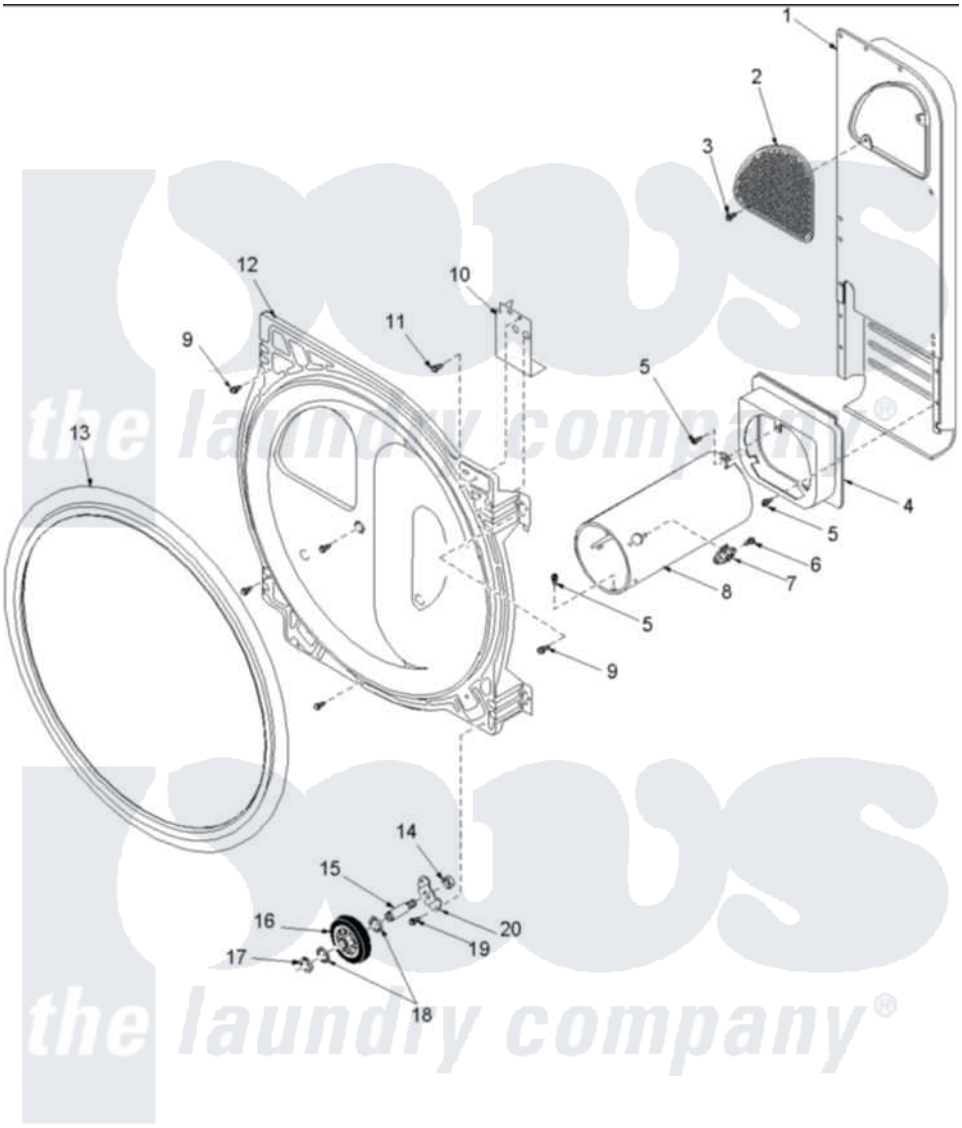

Amana Residential Amana LGA60AL (BOM: PLGA60AL) Dryer Parts Parts Diagram 08 - REAR BULKHEAD, ROLLERS & AIR DUCT ASSY
Click on the part number to view part

Item	Original Part Number	Replaced By	Status	Part Description
1	503490	503605		Assembly, Heater Duct
2	500074	503605		Assembly, Heater Duct
4	500122	510101		Shroud Heat Duct
6	51782		Not Available	SCREW, 6B-20X5/16
7	Y61886			Thermostat, Limit-Blk
8	Y61888	37001303		Duct- Comb
10	Y504185			Shield, Terminal Block
11	501285			Screw, No.12 X 9/16-Pla
12	504802		Not Available	BLKHD, REAR (STN STEEL)
13	501801	37001132		Seal, Cylinder
14	56156	358160		Nut
15	56461			Shaft
16	500214	37001042		Assembly, Cylinder Roller
17	23748			Ring, Retaining
18	52549			Washer, 501 ID X3/4 Odx

20	500062	40113601	Assembly, Roller Brkt