Amana LW2403 (BOM: P7762127W W) 01 - FRONT PANEL

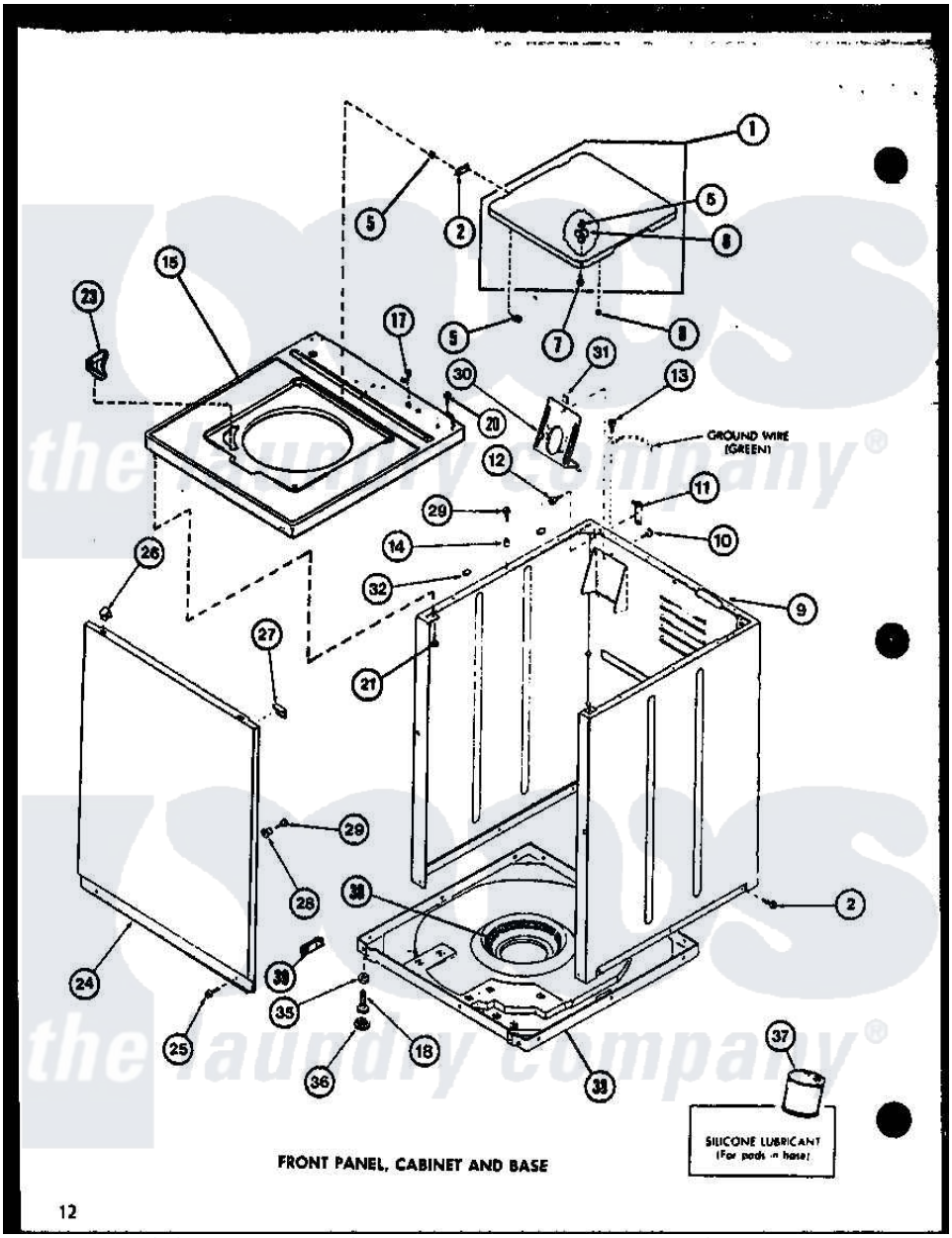

Amana Residential Amana LW2403 (BOM: P7762127W W) Washer Parts Parts Diagram 01 - FRONT PANEL
Click on the part number to view part

Item	Original Part Number	Replaced By	Status	Part Description
1	R0603146		Not Available	LID ``L``
"	R0603208		Not Available	LID
"	R0603147		Not Available	LID ``W``
2	R0605695		Not Available	HINGE
6	R0603504			Actuator, Door Switch
7	R0600008	26769		Assembly, Screw And Washer
8	R0606501	40038001		Bumper
9	R0603209		Not Available	CABINET, GOLD
"	R0603115	38612WP		Kit-Servic
"	R0603090	38612LP		Kit Service Cabinet
10	R0600009		Not Available	SCREW
11	R0605528	Y27103		Hinge, Hold-Down Lug
12	R0600032	3390631		Screw, 10-16 X 3/8
13	R0600033	489464		Screw
14	R0603524	505187		Locator, Panel
15	R0603559		Not Available	TOP, W/BLEACH DESP

"	R0603142	32808LP		Assembly Top And Carton
"	R0603143	32808WP		Assembly Top And Carton
17	R0601502	211881		Grommet, Cord Part Not Used-Gas Models Only
18	R0600030	22003428		Leg, Adjustable
20	R0600040		Not Available	SCREW
21	R0600096		Not Available	SCREW
23	R0603603		Not Available	DISPENSER, BLEACH
24	R0603210		Not Available	PANEL, FRONT GOLD
"	R0603116	32708WP		Panel Front
"	R0603052	32708LP		Panel, Front
25	R0600029	27001200		Screw
26	R0601520	22001650		Fastener, Spring
27	R0603526		Not Available	PROTECTOR
28	R0603525		Not Available	LOCATER LUG
29	R0600031	Y014874		Screw, Idler Arm And Sleeve
30	R0605527	39407		Bracket, Valve
31	R0601007	54038		NUt, Speed U-Type
32	R0606519	Y56128		Pad, Bumper
33	R0603107	31653P		Assembly, Base-Complete-G90
35	R0601016	40038101		Nut, Leg
36	R0606518	40016001		Foot, Rubber
37	R0608002	26594P		Grease, Silicone - 2 Oz Tube
38	R0610052		Not Available	SNUBBER PAD
39	R0608012	511637P		Adh Dow 737 Clr 3 Oz Tube
NI	R0603599		Not Available	ENCLOSURE, WIRE HARNESS

the laundry company®