Amana LW3503W (BOM: P1163203W W) 13 - OUTER TUB, COVER & PRESSURE HOSE

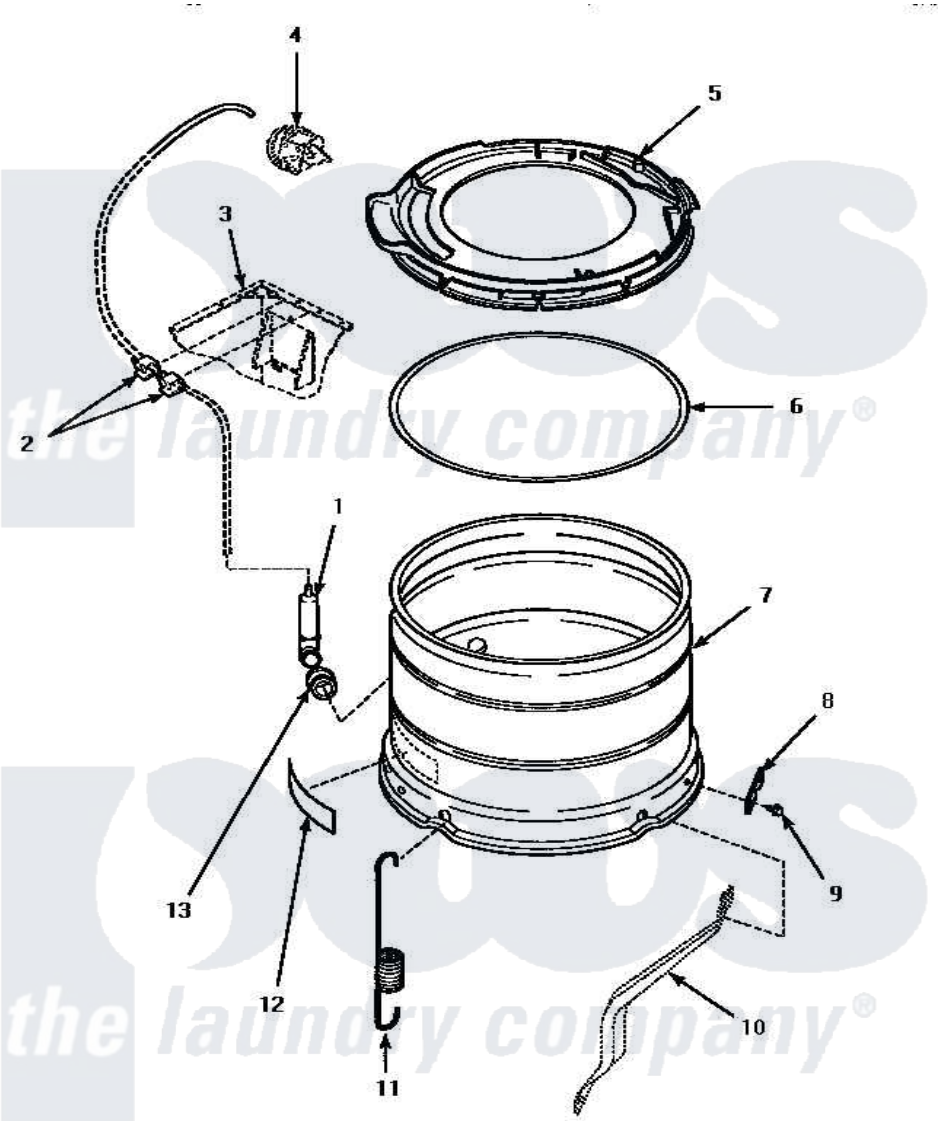

OUTER TUB, COVER AND PRESSURE HOSE

Amana Residential Amana LW3503W (BOM: P1163203W W) Washer Parts Parts Diagram 13 - OUTER TUB, COVER & PRESSURE HOSE
Click on the part number to view part

Item	Original Part Number	Replaced By	Status	Part Description
1	30907	40008501		Assembly, Pressure Bulb
2	21036			Clip, Cable
3	Y00000000		Not Available	SEE NOTE CABINET
4	Y00000000		Not Available	SEE NOTE PRESSURE SWITCH
5	36025	36025P		Assembly, Tub Coverand Gasket
6	32857			Gasket, Tub Cover Small
7	34438P			Assembly, Outer Tub
8	27926			Plate, Leg .063
9	35369	40128701		Screw, 5/16-18 X .50
10	Y00000000		Not Available	SEE NOTE SUPPORT LEG
11	35948			Spring, Leg-Large Tub
12	500049		Not Available	STICKER
13	29175	40037801		Grommet

NI	29213	39125	Tubing 31