Amana LW4202W (BOM: P1163210W W) 07 - FRONT PANEL, BASE & CABINET ASSY

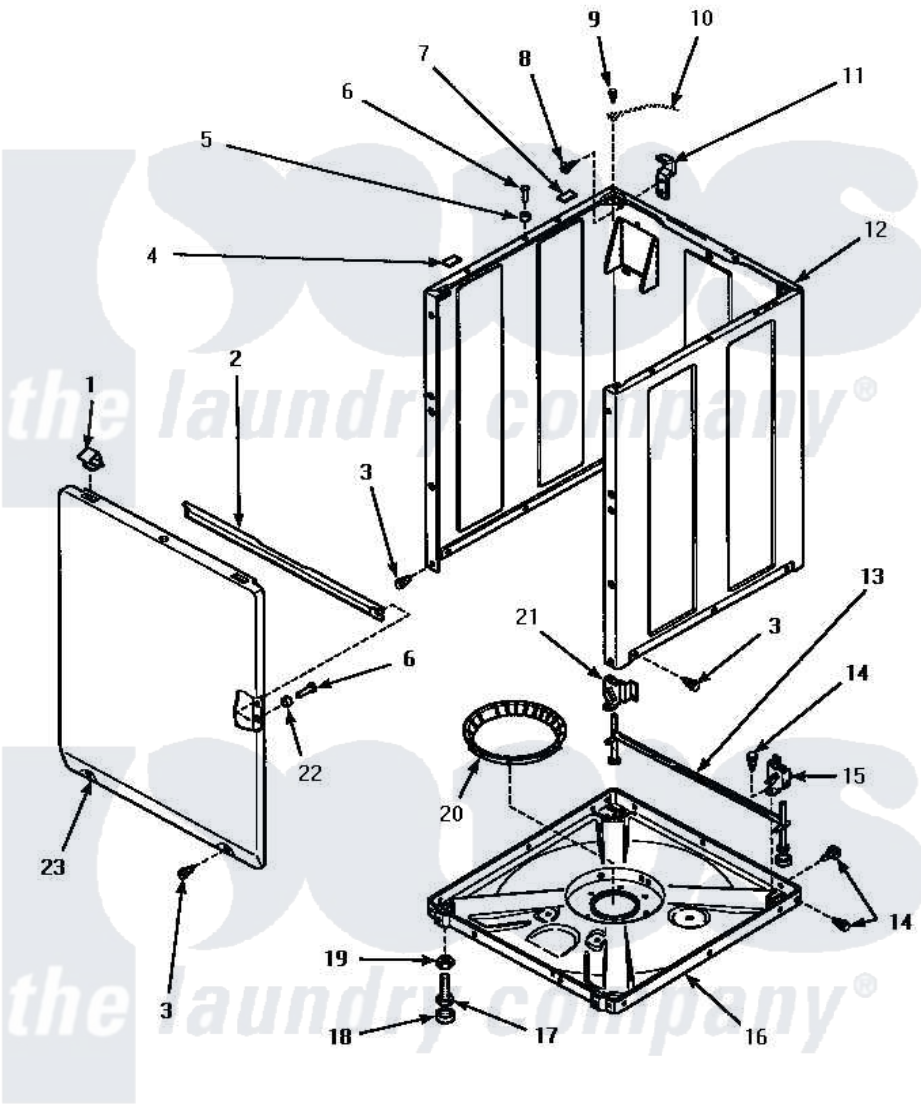

FRONT PANEL, BASE AND CABINET ASSEMBLY

Amana Residential Amana LW4202W (BOM: P1163210W W) Washer Parts Parts Diagram 07 - FRONT PANEL, BASE & CABINET ASSY
Click on the part number to view part

Item	Original Part Number	Replaced By	Status	Part Description
1	35865			Clip, Hold-Down Front Panel
2	Y35097		Not Available	BRACE, FRT PNL
3	27196	27001200		Screw
4	Y56128			Pad, Bumper
5	56079	505187		Locator, Panel
6	32671	Y014874		Screw, Idler Arm And Sleeve
7	36226			Pad, Bumper .25
8	34499		Not Available	SCREW, No.10B X 1/4 TAP IN HX
9	56392		Not Available	SCREW,8-18 X 3/8 TAPPI
10	Y00000000		Not Available	SEE NOTE GROUND WIRE, GREEN
11	Y27103			Hinge, Hold-Down Lug
12	34475WP	38612WP		Kit-Servic
"	34475LP	38612LP		Kit Service Cabinet

"	34475HP		Not Available	KIT,SERVICE CABINET
13	34443			Assembly, Leg And Stabilier
14	35148		Not Available	SCREW,1/4-14 X 3/8 HX HD
15	36036		Not Available	BRACKET,SLL-RIGHT
16	34434P			Assembly Nut/Leg Base
17	Y34319	22003428		Leg, Adjustable
18	34318	40016001		Foot, Rubber
19	Y21899	40038101		Nut, Leg
20	36108		Not Available	SNUBBER PAD & ISOLATOR
21	36037			Bracket, Sll-Left
22	28102			Locator, Panel
23	34656WP			Assembly, Front Panel
"	34656HP		Not Available	ASSY,FRONT PANEL
"	34656LP			Assembly, Front Panel

the laundry company®
the laundry company®
the laundry company®