Amana LW4203L2 (BOM: PLW4203L2A) 14 - OUTER TUB, COVER AND PRESSURE HOSE

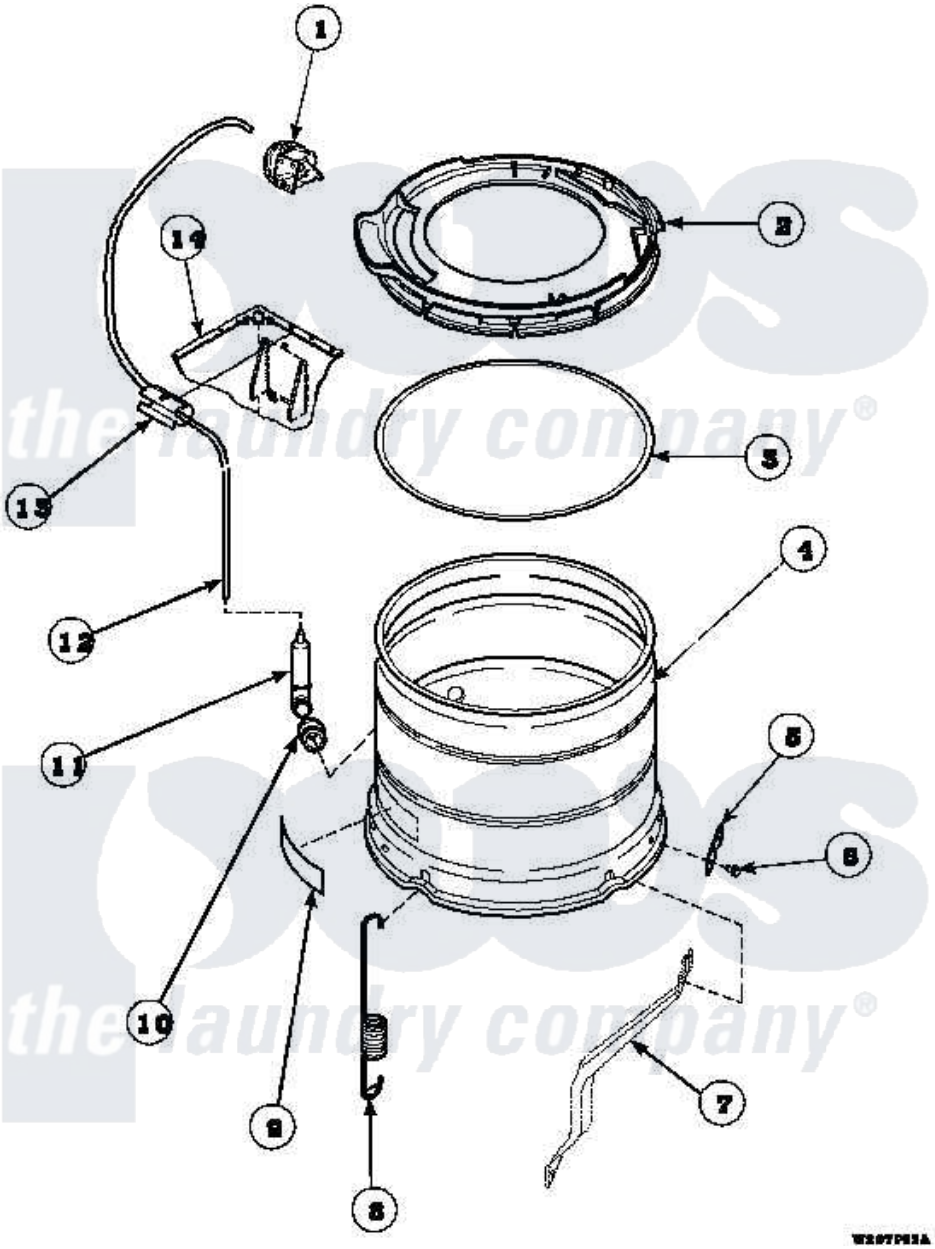

Amana Residential Amana LW4203L2 (BOM: PLW4203L2A) Washer Parts Parts Diagram 14 - OUTER TUB, COVER AND PRESSURE HOSE
Click on the part number to view part

Item	Original Part Number	Replaced By	Status	Part Description
1	36045	40055101		Switch, Pressure
2	36025P			Assembly, Tub Coverand Gasket
3	32857			Gasket, Tub Cover Small
4	34438P			Assembly, Outer Tub
5	27926			Plate, Leg .063
6	35369	40128701		Screw, 5/16-18 X .50
7	34471		Not Available	LEG,SUPPORT
8	35948			Spring, Leg-Large Tub
9	500049		Not Available	STICKER
10	29175	40037801		Grommet
11	30907	40008501		Assembly, Pressure Bulb
12	29213	39125		Tubing 31
13	36985		Not Available	CLIP, HOSE
14	34475_P		Not Available	CABINET