Amana LW6501W2B (BOM: PLW6501W2 B) 05 - CAB TOP/LOADING DR & CTRL HOOD REAR PAN

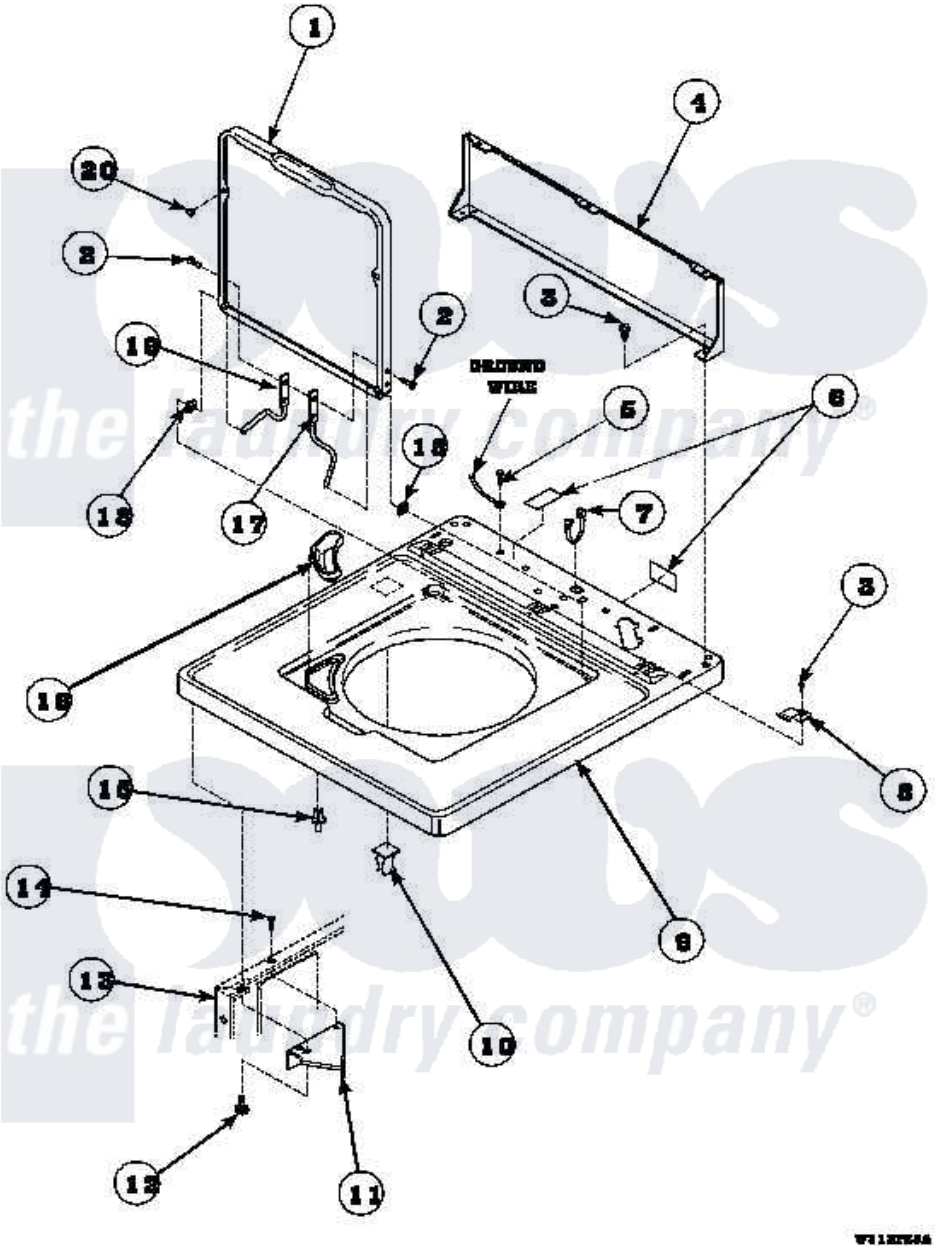

Amana Residential Amana LW6501W2B (BOM: PLW6501W2 B) Washer Parts Parts Diagram 05 - CAB TOP/LOADING DR & CTRL HOOD REAR PAN
Click on the part number to view part

Item	Original Part Number	Replaced By	Status	Part Description
1	33541P		Not Available	LID
2	34337	W10119828		Screw, Lid Hinge Mounting
3	23962	W10116760		Screw
4	37782			Control Hood Back Panel
5	51784		Not Available	SCREW,10B-16 X 1/2 HEX
6	24903		Not Available	STICKER,DISCONNECT POW
7	21903	211881		Grommet, Cord Part Not Used-Gas Models Only
8	35887	40063901		Clip, Hold Down
9	34902P		Not Available	TOP
10	36519		Not Available	CLIP
11	36034			Bracket, Director-Module
12	Y31644	27001200		Screw
13	34475P		Not Available	CABINET

14	36035		Not Available	SCREW,8-18X3/8 PHIL FLT HD
15	56534			Barrel, Support
16	34776		Not Available	DISPENSER,BLEACH
17	36437			Hinge, Lid R
18	33446	40008201		Bushing, Hinge
19	36513			Hinge, Left
20	21685	40038001		Bumper

the laundry company®
the laundry company®
the laundry company®