Amana LW6661W2 (BOM: PLW6661W2 B) 04 - BRG HSG/BRAKE PULLEY & PIVOT DOME

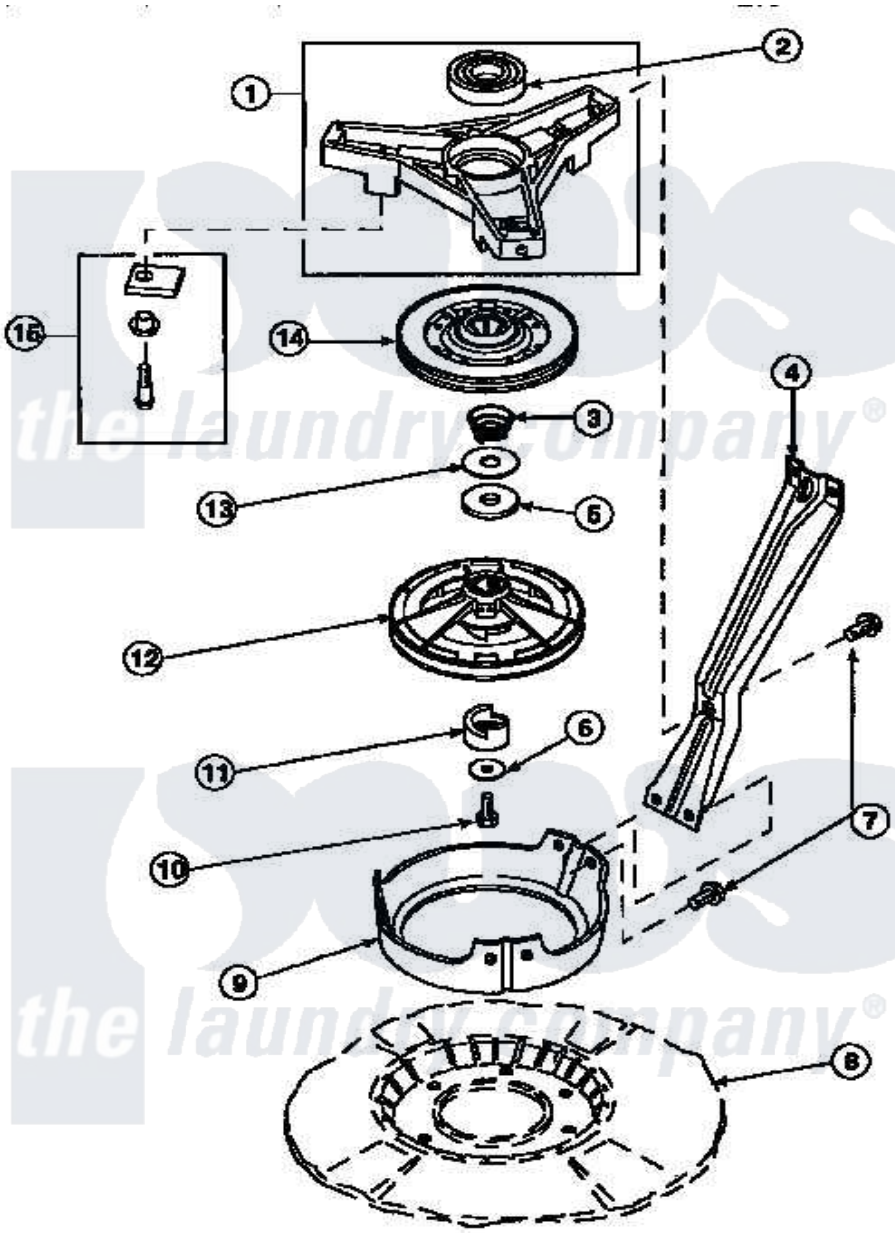

Amana Residential Amana LW6661W2 (BOM: PLW6661W2 B) Washer Parts Parts Diagram 04 - BRG HSG/BRAKE PULLEY & PIVOT DOME
Click on the part number to view part

Item	Original Part Number	Replaced By	Status	Part Description
1	35746			AssembLy, Bearing Housing-L
2	28944R	40004001		Bearing, Main
3	33435			Spring, Conical
4	34792			Leg, Support
5	27015	40063201		Washer, Flat
6	26509	40041501		Washer
7	35369	40128701		Screw, 5/16-18 X .50
8	36599P			Assembly Nut/ Leg Base
9	34470			Dome, Pivot
10	27220	40063401		Screw, 1/4-20 x 5/8 Hex
11	27018			Helix
12	34923			Assembly, Pulley-Spin And Agitate
13	35535	40065701		Washer, 2 Odx.63 ID
14	31961P	R9900474		Brake Assembly

15	548P3	R9900543	Pad-Brake
NI	26594P		Grease, Silicone - 2 Oz Tube

the laundry company®

the laundry company®

the laundry company®