Amana LW8413W2 (BOM: PLW8413W2 A) 02 - AGITATOR/DRIVE BELL/SEAL KIT/TUB & HUB

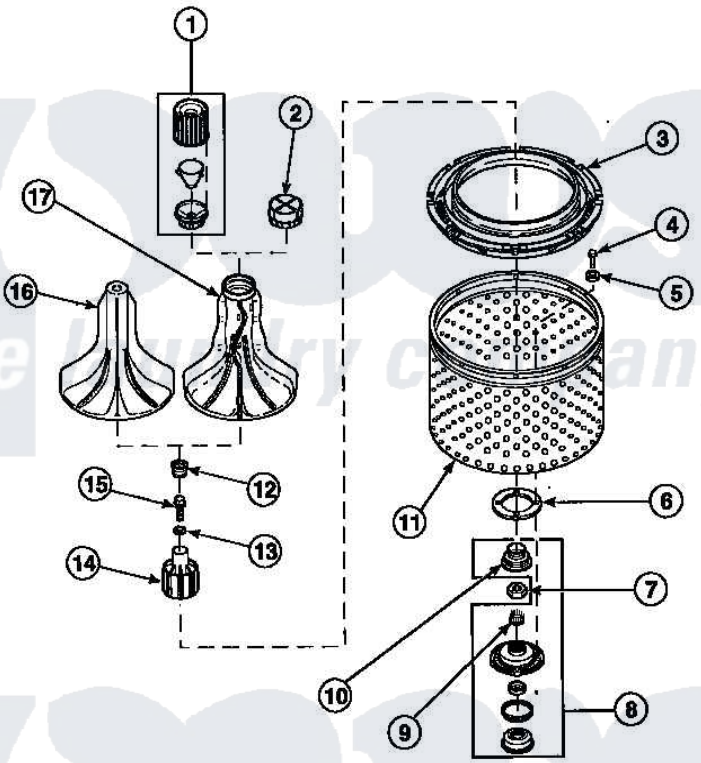

AGITATOR, DRIVE BELL, SEAL KIT, WASHTUB AND HUB
(Models LW2001*2, LW6001*2, LW6101*B, LW8501*2, LW8501*2B, LW8601*2 and LW8201*2)

* ADD LETTER TO DESIGNATE COLOR. L - Almond W - White

Amana Residential Amana LW8413W2 (BOM: PLW8413W2 A) Washer Parts Parts Diagram 02 - AGITATOR/DRIVE BELL/SEAL KIT/TUB & HUB
Click on the part number to view part

Item	Original Part Number	Replaced By	Status	Part Description
1	36542	40002101W		Assembly, Fabric Softner
2	36515			Cap, Agitator
3	35035			Guard, Clothes
4	27202	W10116787		Screw
5	28094			Gasket
7	Y29220	40016301		Nut, Lock
9	29728	40008301		Insert, Spline
10	36425	40016101		Seal, Bell Drive
12	36511	40008401		Plug, Bell
13	36472			O-Ring
15	34288	40065102		Screw, Shoulder 1/4
16	33513			Agitator, Short-Coin