Amana LWA18AW (BOM: PLWA18AW) 06 - FRONT PANEL, BASE, AND SPECIAL TOOLS

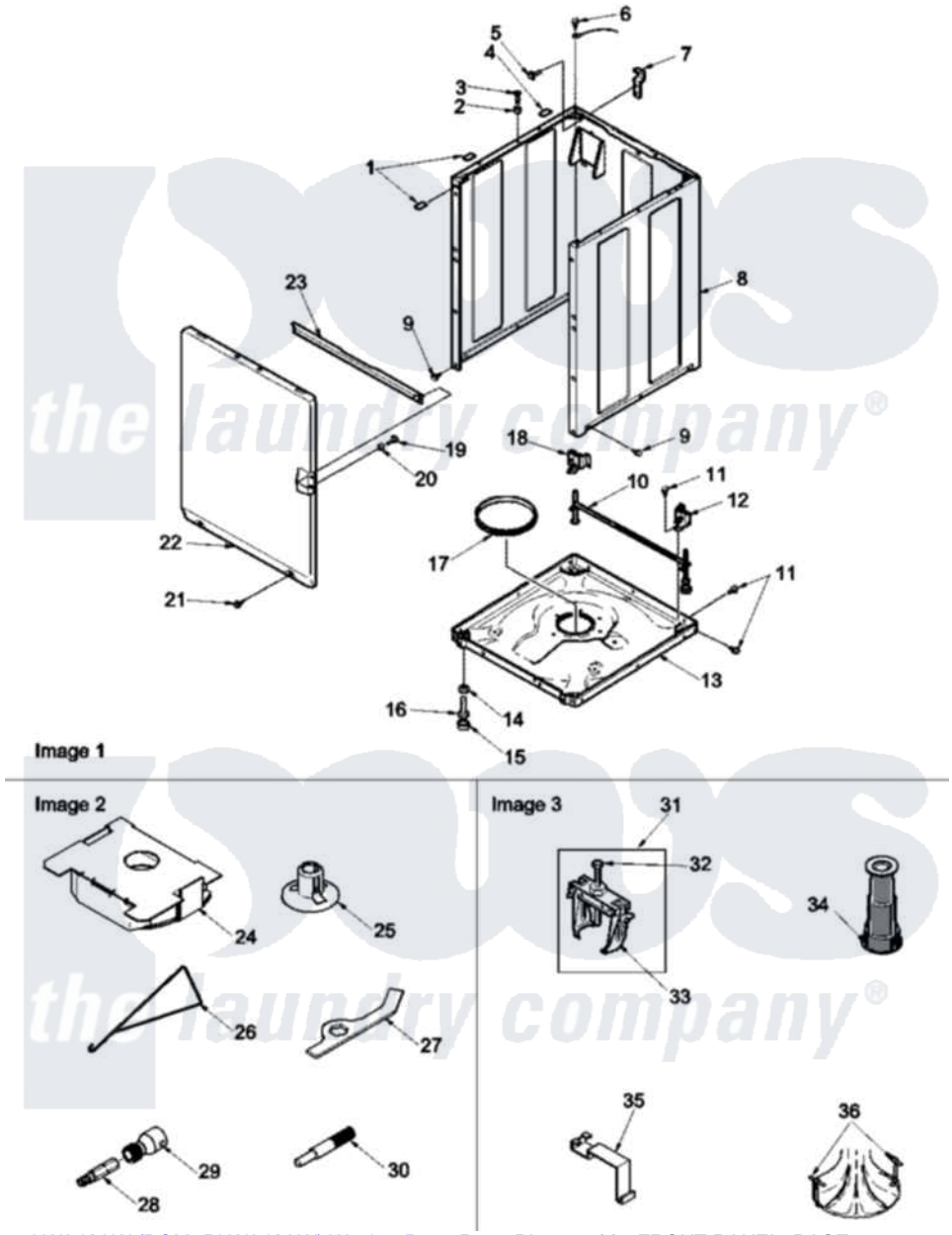

Amana Residential Amana LWA18AW (BOM: PLWA18AW) Washer Parts Parts Diagram 06 - FRONT PANEL, BASE, AND SPECIAL TOOLS
Click on the part number to view part

Item	Original Part Number	Replaced By	Status	Part Description
1	Y56128			Pad, Bumper
2	56079	505187		Locator, Panel
3	32671	Y014874		Screw, Idler Arm And Sleeve
4	36226			Pad, Bumper .25
5	34499		Not Available	SCREW, No.10B X 1/4 TAP IN HX
6	51784		Not Available	SCREW,10B-16 X 1/2 HEX
7	Y27103			Hinge, Hold-Down Lug
8	34475WP	38612WP		Kit-Servic
9	27196	27001200		Screw
10	34443			Assembly, Leg And Stabilier
11	35148		Not Available	SCREW,1/4-14 X 3/8 HX HD
12	36036		Not Available	BRACKET,SLL-RIGHT
13	37807	39788		Assembly- Base
14	Y34319	22003428		Leg, Adjustable

15	Y21899	40038101		Nut, Leg
16	34318	40016001		Foot, Rubber
17	37937	40037401		Ring, Friction
18	36037			Bracket, Sll-Left
19	32671	Y014874		Screw, Idler Arm And Sleeve
20	28102			Locator, Panel
21	38272	40034101		Screw, No.12bx1/2
22	38238WP	38335WP		Panel Frontw/Carton
23	Y35097		Not Available	BRACE, FRT PNL
24	38039	27001185		Brace- Shp
25	38149	27001185		Brace- Shp
26	289P4	321P4		Hook, Spring
27	306P4			Hex Wrench
28	282P4			T25 Tamper Resistant Bit
29	24161			Torx Bit Holder
30	305P4		Not Available	TOOL, TRANSMISSION PI
31	294P4			Bell Tool
32	294P4B			Drive Bell Bolt
33	294P4A			Jaw, Drive Bell Tool
34	293P4			Seal Tool
35	273P4			Tub Cover Gasket Tool
36	254P4P			Agitator Hooks
NI	555P3	725P3		Kit
"	38651			Assembly, Wire Harness-Hood
"	38660			Assembly, Wire Harness

the laundry company®