# Amana LWA40AW (BOM: PLWA40AW) 06 - FRONT PANEL, BASE, AND SPECIAL TOOLS

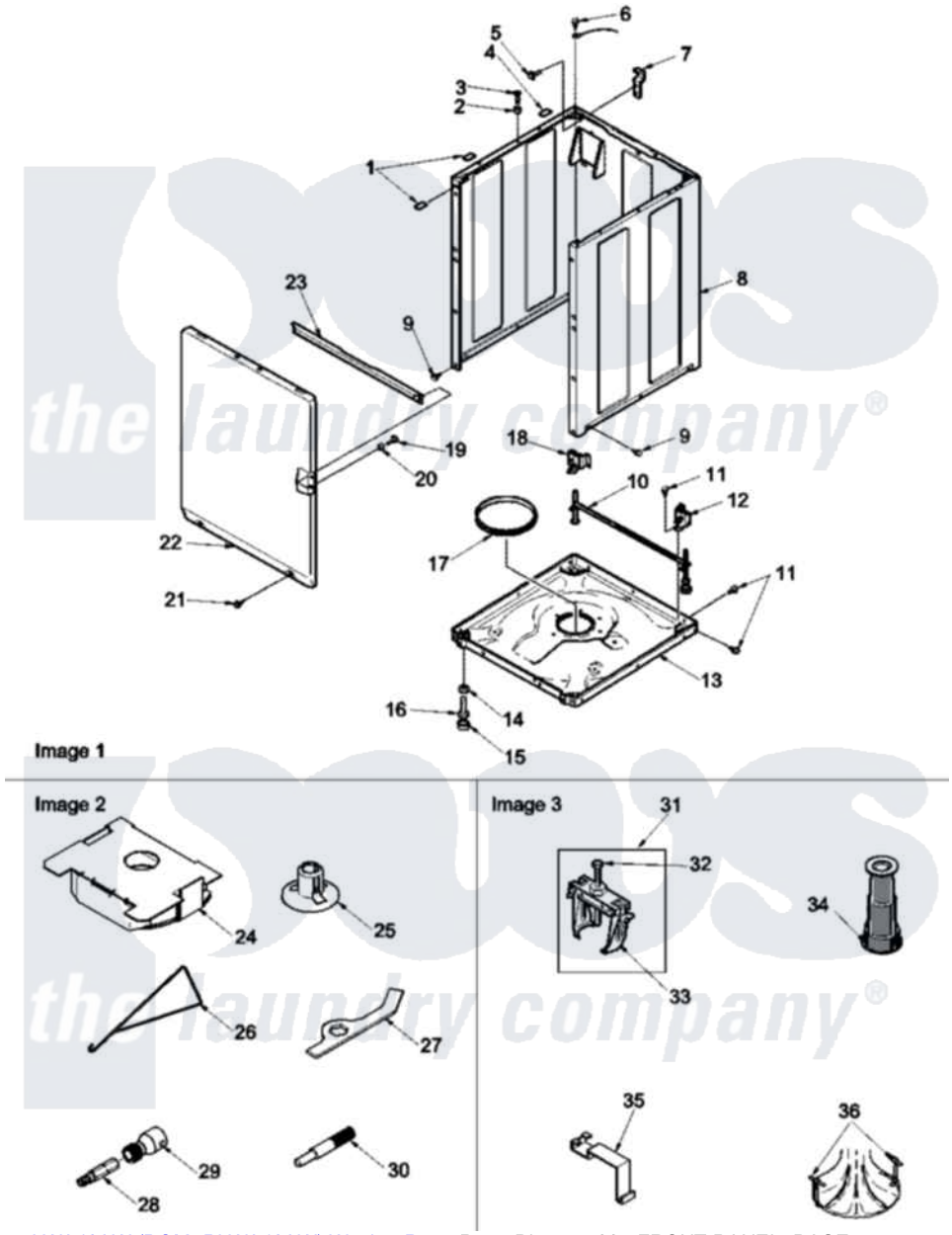


Amana Residential Amana LWA40AW (BOM: PLWA40AW) Washer Parts Parts Diagram 06 - FRONT PANEL, BASE, AND SPECIAL TOOLS

Click on the part number to view part

| Item | Original Part Number | Replaced By | Status | Part Description |
|---|---|---|---|---|
| 1 | Y56128 | | | Pad, Bumper |
| 2 | 56079 | 505187 | | Locator, Panel |
| 3 | 32671 | Y014874 | | Screw, Idler Arm And Sleeve |
| 4 | 36226 | | | Pad, Bumper .25 |
| 5 | 34499 | | Not Available | SCREW, No.10B X 1/4 TAP IN HX |
| 6 | 51784 | | Not Available | SCREW,10B-16 X 1/2 HEX |
| 7 | Y27103 | | | Hinge, Hold-Down Lug |
| 8 | 34475WP | 38612WP | | Kit-Servic |
| 9 | 27196 | 27001200 | | Screw |
| 10 | 34443 | | | Assembly, Leg And Stabilier |
| 11 | 35148 | | Not Available | SCREW,1/4-14 X 3/8 HX HD |
| 12 | 36036 | | Not Available | BRACKET,SLL-RIGHT |
| 13 | 37807 | 39788 | | Assembly- Base |
| 14 | Y21899 | 40038101 | | Nut, Leg |

| | | | | |
|---|---|---|---|---|
| 15 | 34318 | 40016001 | | Foot, Rubber |
| 16 | Y34319 | 22003428 | | Leg, Adjustable |
| 17 | 37937 | 40037401 | | Ring, Friction |
| 18 | 36037 | | | Bracket, Sll-Left |
| 19 | 32671 | Y014874 | | Screw, Idler Arm And Sleeve |
| 20 | 28102 | | | Locator, Panel |
| 21 | 38272 | 40034101 | | Screw, No.12bx1/2 |
| 22 | 38238WP | 38335WP | | Panel Frontw/Carton |
| 23 | Y35097 | | Not Available | BRACE, FRT PNL |
| 24 | 38039 | 27001185 | | Brace- Shp |
| 25 | 38149 | 27001185 | | Brace- Shp |
| 26 | 289P4 | 321P4 | | Hook, Spring |
| 27 | 306P4 | | | Hex Wrench |
| 28 | 282P4 | | | T25 Tamper Resistant Bit |
| 29 | 24161 | | | Torx Bit Holder |
| 30 | 305P4 | | Not Available | TOOL, TRANSMISSION PI |
| 31 | 294P4 | | | Bell Tool |
| 32 | 294P4B | | | Drive Bell Bolt |
| 33 | 294P4A | | | Jaw, Drive Bell Tool |
| 34 | 293P4 | | | Seal Tool |
| 35 | 273P4 | | | Tub Cover Gasket Tool |
| 36 | 254P4P | | | Agitator Hooks |
| NI | 555P3 | 725P3 | | Kit |
| " | 38651 | | | Assembly, Wire Harness-Hood |
| " | 38660 | | | Assembly, Wire Harness |

the laundry company®