Amana LWC50AW (BOM: PLWC50AW) 10 - WELDMENT AND BEARING ASSY, BRAKE AND PUL

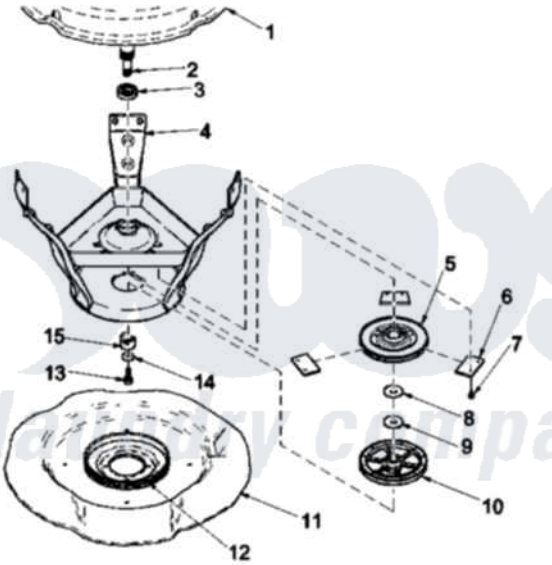

Image 1

Image 2

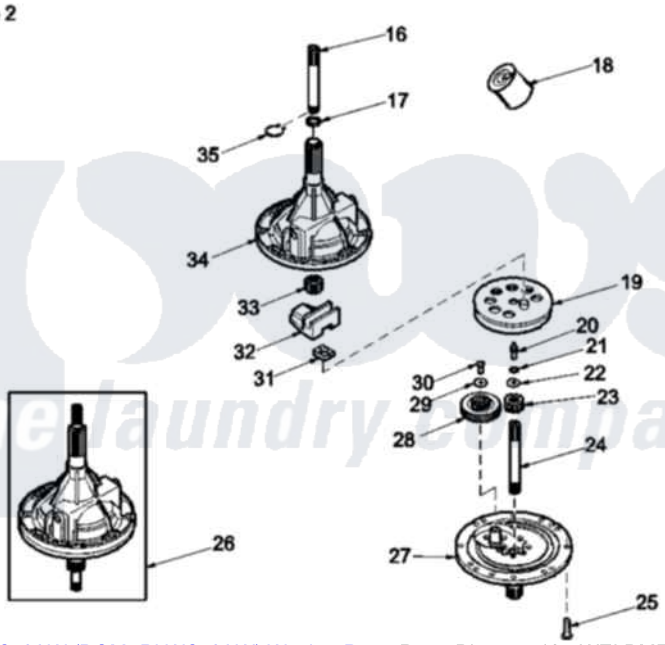

Amana Residential Amana LWC50AW (BOM: PLWC50AW) Washer Parts Parts Diagram 10 - WELDMENT AND BEARING ASSY, BRAKE AND PUL
Click on the part number to view part

Item	Original Part Number	Replaced By	Status	Part Description
1	Y00000000		Not Available	SEE NOTE SEE NOTE OUTER TUB
2	Y00000000		Not Available	SEE NOTE SEE NOTE TRANSMISSION ASSY(IMAGE 2)
3	28944R	40004001		Bearing, Main
4	39253			Assembly, Weld And Bearing
5	38505	R9900474		Brake Assembly
6	637P3	R0000014		Kit, Brake Pad
7	37836	40064401		Screw
8	35535	40065701		Washer, 2 Odx.63 ID
9	27015	40063201		Washer, Flat
10	Y38007	40047202		Pulley, Spin
11	37807	39788		Assembly- Base
12	37937	40037401		Ring, Friction
13	27220	40063401		Screw, 1/4-20 x 5/8 Hex

14	26509	40041501		Washer
15	Y38008	40047402		Helix, Plastic
16	Y36570			Shaft, Output
17	35092			Washer, 3628id X 1.00 X .056
18	27243P			Oil, CW Transmission F-
19	26577			Assembly, Gear And Stud
20	27030		Not Available	SCREW,1/4-20 SPECIAL
21	21456			Lockwasher, 1/4 Intshkp
22	26509	40041501		Washer
23	37406			Pinion, Drive
24	38268			Shaft, Input
25	32814		Not Available	SCREW,1/4-20X7/8 SERRA
26	38826P	12002178		Transmison
27	Y37471			Assembly, Transmission Cover
28	37403			Gear, Reduction
29	29260		Not Available	WASHER
30	29273			Screw, 1/4-20 X 3/8
31	26493			Slide
32	Y31526			Rack
33	27003			Pinion, Agitator
34	33223		Not Available	ASSY,TRANSMISSION CASE
35	27197			Ring, Retaining
NI	37577P		Not Available	SEALANT

the laundry company®