Amana LWD773L (BOM: P1122809W) 04 - Page 5

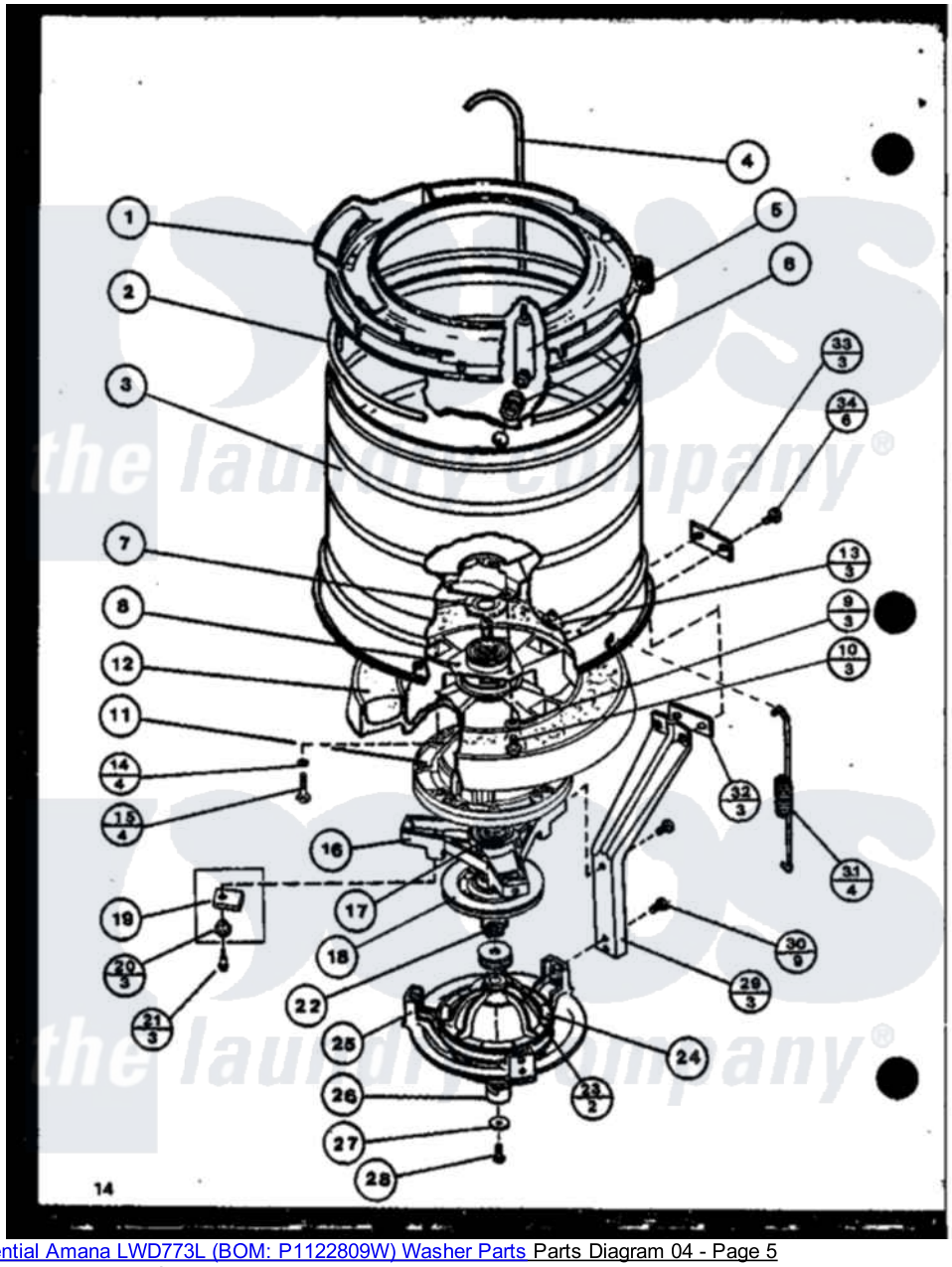

Amana Residential Amana LWD773L (BOM: P1122809W) Washer Parts Parts Diagram 04 - Page 5
Click on the part number to view part

Item	Original Part Number	Replaced By	Status	Part Description
1	33184P			Cover, Outer Tub
2	32857			Gasket, Tub Cover Small
3	33178	33178P		Assembly- Oute
4	29213	39125		Tubing 31
5	30907	40008501		Assembly, Pressure Bulb
6	29175	40037801		Grommet
7	27187			Flinger
8	Y06516		Not Available	ASSEMBLY, BEARING HOUSING
9	04366			Lockwasher, 5/16intshkp
10	Y03155		Not Available	SCREW, CAP
11	33227	33227P		Assembly- Tran
12	27143		Not Available	BALANCE RING
13	27222			Nut, Retainer 5/16-18
14	02431			Lockwasher, 1/4 Ext Shk
15	27200		Not Available	CAP SCREW
16	28913	35746		AssembLy, Bearing Housing-L

17	28944R	40004001		Bearing, Main
18	31961P	R9900474		Brake Assembly
19	348P3	R9900543		Pad-Brake
20	29993			Sleeve, Anti-Rotation
21	26547			Screw, 10-24 Shoulder
22	33435			Spring, Conical
23	26509	40041501		Washer
24	34232	34232P		Kit-Pulley
25	27124		Not Available	DOME,PIVOT
26	27018			Helix
27	26509	40041501		Washer
28	27220	40063401		Screw, 1/4-20 x 5/8 Hex
29	27090			Leg, Support
30	30016	40128701		Screw, 5/16-18 X .50
31	27239			Spring, Leg
32	27927			Plate, Leg .032
33	27926			Plate, Leg .063
34	27205	40128701		Screw, 5/16-18 X .50

the laundry company®
the laundry company®