Amana NA3312 06 - FRONT PANEL, CABINET & BASE

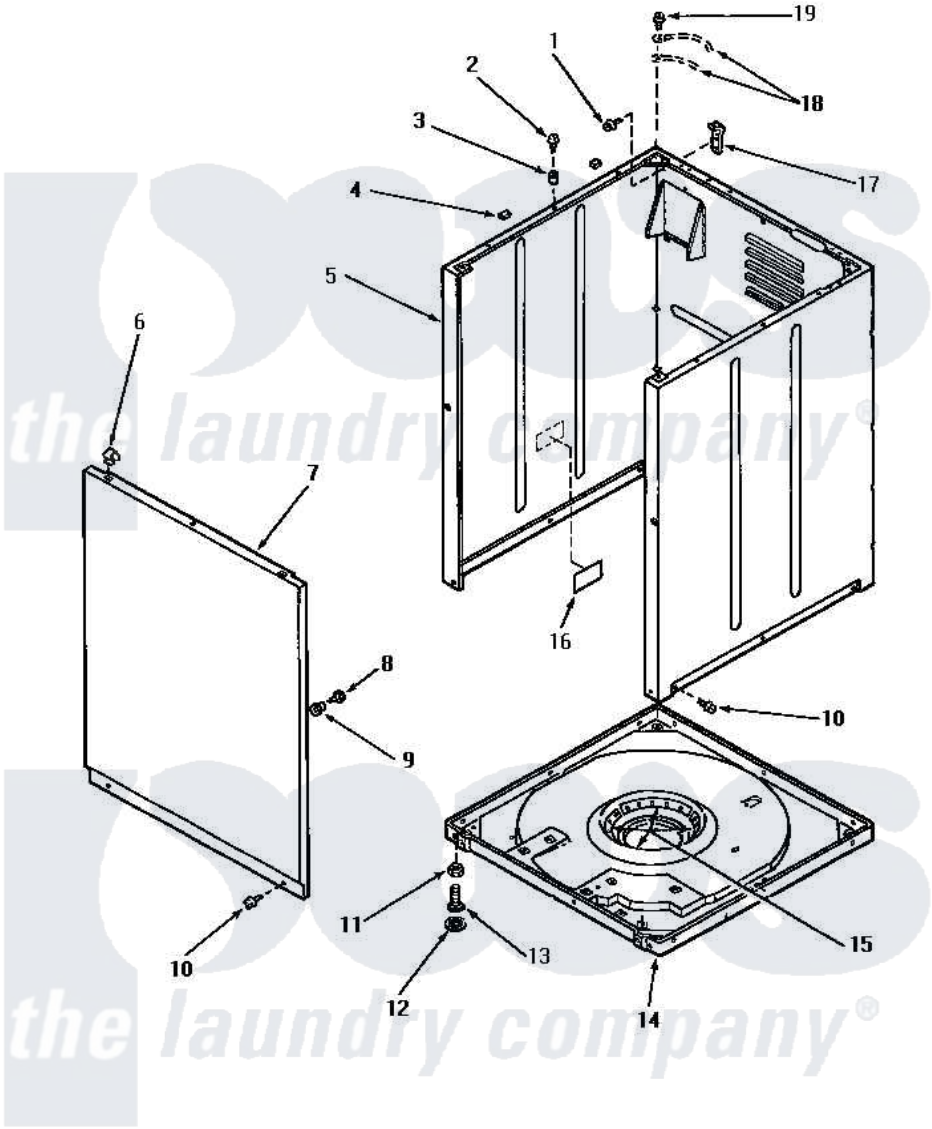

FRONT PANEL, CABINET AND BASE

Amana Residential Amana NA3312 Washer Parts Parts Diagram 06 - FRONT PANEL, CABINET & BASE
Click on the part number to view part

Item	Original Part Number	Replaced By	Status	Part Description
1	51780	3390631		Screw, 10-16 X 3/8
2	56086	Y014874		Screw, Idler Arm And Sleeve
3	56079	505187		Locator, Panel
4	Y56128			Pad, Bumper
5	31669HP		Not Available	REPL BY 34475HP
"	31669WP	38612WP		Kit-Servic
"	31669LP	38612LP		Kit Service Cabinet
6	28835	22001650		Fastener, Spring
7	32708H		Not Available	PANEL,FRONT
"	32708L	32708LP		Panel, Front
"	32708W	32708WP		Panel Front
8	32671	Y014874		Screw, Idler Arm And Sleeve
9	28102			Locator, Panel
10	27196	27001200		Screw
11	28199		Not Available	LOCKNUT
12	21749	40016001		Foot, Rubber

13	20409	22003428		Leg, Adjustable
14	31653P			Assembly, Base-Complete-G90
15	434P3		Not Available	KIT,SNUBBER PAD
16	33285		Not Available	TAPE,1 INCH SQUARE,DBL
17	Y27103			Hinge, Hold-Down Lug
18	Y00000000		Not Available	SEE NOTE GROUND WIRES -- (GREEN)
19	56392		Not Available	SCREW,8-18 X 3/8 TAPPI

the laundry company®
the laundry company®
the laundry company®