Amana NA3511 05 - CAB TOP/LOADING DR & CTRL HOOD REAR PAN

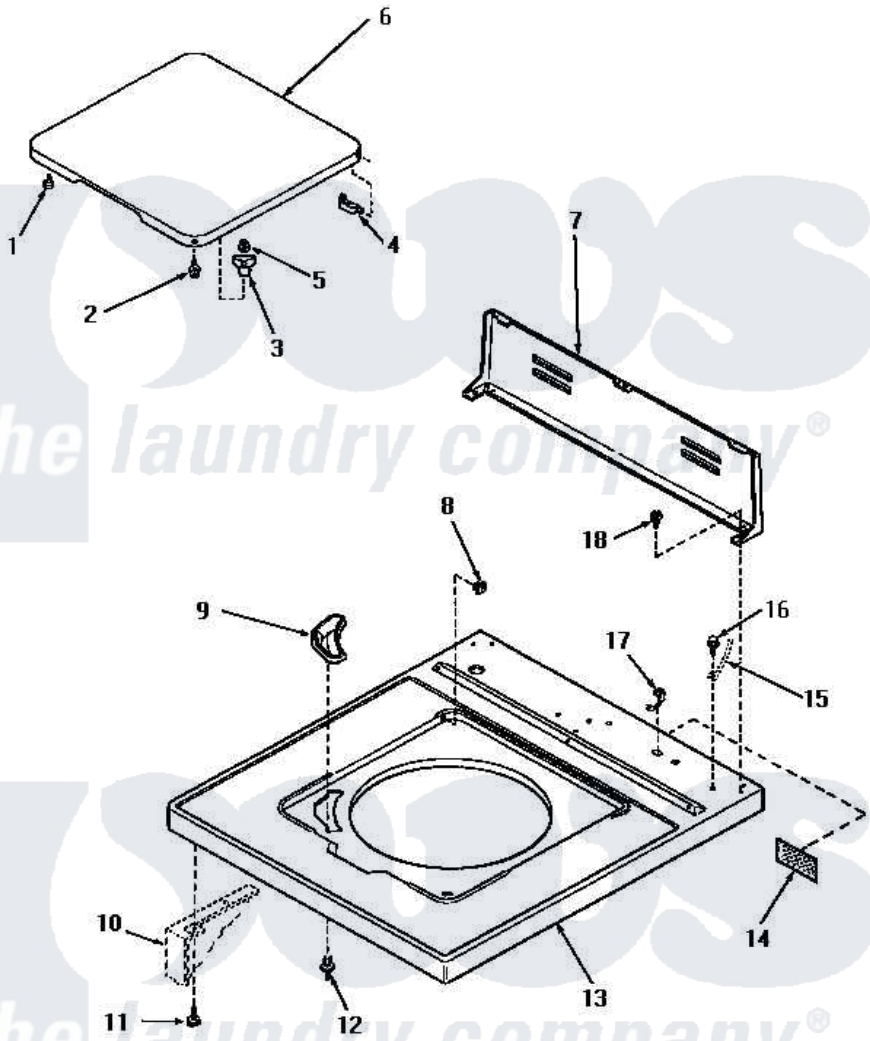

CABINET TOP, LOADING DOOR AND CONTROL HOOD REAR PANEL

Amana Residential Amana NA3511 Washer Parts Parts Diagram 05 - CAB TOP/LOADING DR & CTRL HOOD REAR PAN

Click on the part number to view part

Item	Original Part Number	Replaced By	Status	Part Description
1	32507	40038001		Bumper
2	27203		Not Available	ASSY,SCREW & WASHER
3	27149			Catch, Lid Switch
4	27626		Not Available	HINGE,HIDDEN
5	21752			Nut, 8-32 Hex Brilock
6	31315W		Not Available	LOADING DOOR, WHITE
"	31315L		Not Available	LOADING DOOR, ALMOND
"	31315H		Not Available	LOADING DOOR, HARVEST GOLD
7	31230		Not Available	CONTROL HOOD REAR PANEL
8	27625			Bushing
9	32786		Not Available	BLEACH DISPENSER
10	Y00000000		Not Available	SEE NOTE CABINET
11	Y31644	27001200		Screw
12	56534			Barrel, Support

13	32808L	32808LP		Assembly Top And Carton
"	32808H		Not Available	CABINET TOP, HARVEST GOLD
"	32808W	32808WP		Assembly Top And Carton
14	24903		Not Available	STICKER,DISCONNECT POW
15	Y00000000		Not Available	SEE NOTE GROUND WIRE, GREEN
16	52909			Screw, 10B-16 X 1/2 HeX
17	21903	211881		Grommet, Cord Part Not Used-Gas Models Only
18	23962	W10116760		Screw

the laundry company®
the laundry company®
the laundry company®