Amana NA3612 16 - PUMP ASSY/BRKT/HOSES & SIPHON BREAK KIT

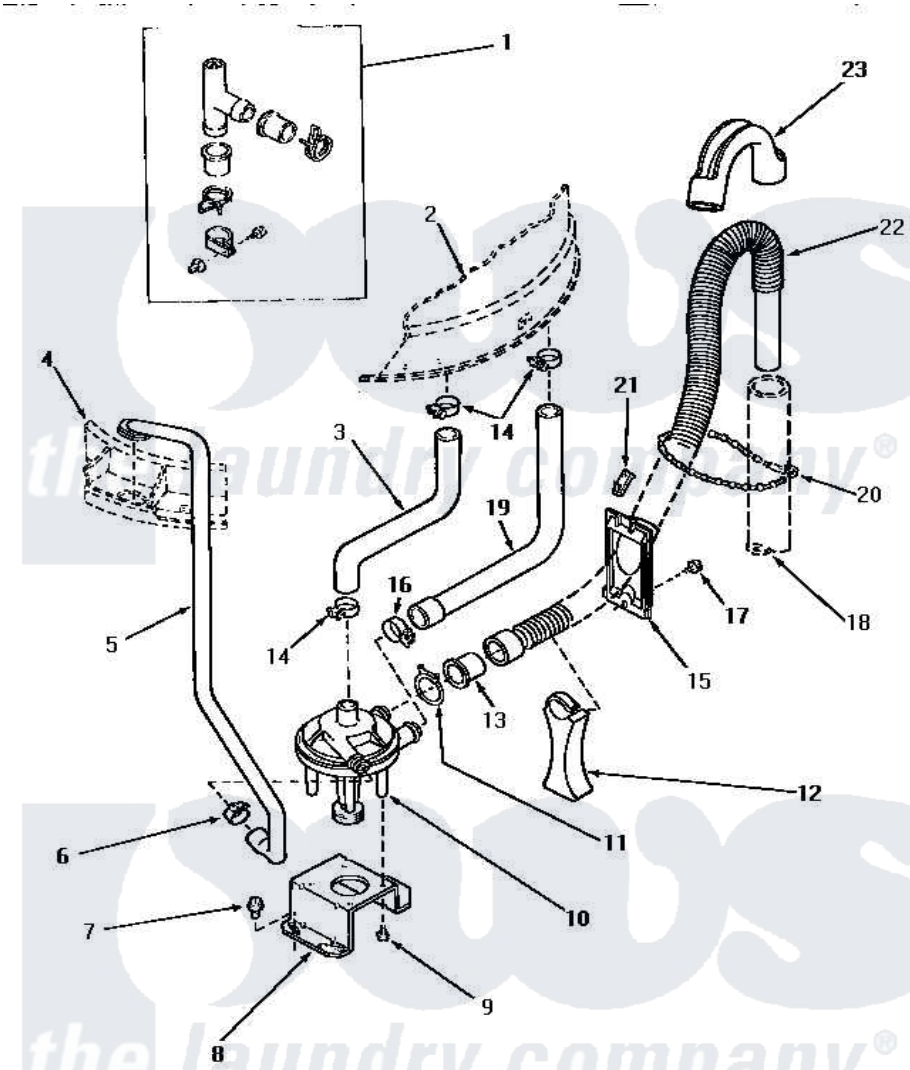

PUMP ASSEMBLY, BRACKET, HOSES AND SIPHON BREAK KIT

Amana Residential Amana NA3612 Washer Parts Parts Diagram 16 - PUMP ASSY/BRKT/HOSES & SIPHON BREAK KIT

Click on the part number to view part

Item	Original Part Number	Replaced By	Status	Part Description
1	386P3	76660		Break-Sphn
2	Y00000000		Not Available	SEE NOTE OUTER TUB
3	27159		Not Available	HOSE,TUB TO PUMP
4	Y00000000		Not Available	SEE NOTE OUTER TUB COVER
5	27232		Not Available	HOSE
6	27644	285655		Clamp, Hose
7	Y31645	27001200		Screw
8	27105			Bracket, Pump Mounting
9	31098			Screw, 10-10 5/8 Unslot
10	31968			Assembly, Pump NA
"	31969			Assembly, Pump NA
11	29172		Not Available	CLAMP,HOSE
12	29284			Stand, Hose
13	29143		Not Available	HOSE,ADAPTER
14	32616		Not Available	(CLAMP HOSE)

15	29131		Not Available	RETAINER,DIRECTIONAL
16	27153	285655		Clamp, Hose
17	30676	27001200		Screw
18	Y00000000		Not Available	SEE NOTE STANDPIPE
19	27160		Not Available	HOSE,TUB TO PUMP-DRAIN
20	33489	8539404		Tie-Wire
21	29936		Not Available	HOSE RETAINER CLIP
22	29142	39952		Hose- Drai
23	29144	22003814		Retainer, Drain Hose
NI	406P3	451P3		Kit Drain Extension

the laundry company®
the laundry company®
the laundry company®