Amana NA5331 05 - CAB TOP/LOADING DR & CTRL HOOD REAR PAN

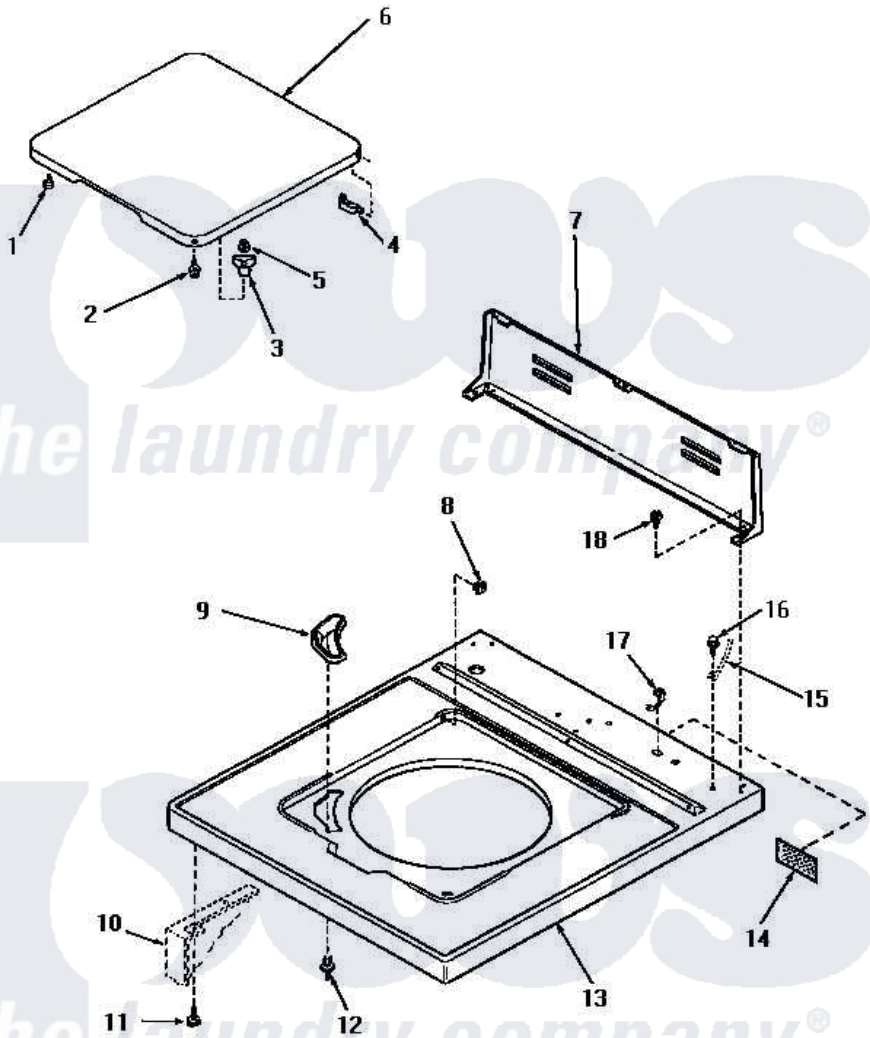

CABINET TOP, LOADING DOOR AND CONTROL HOOD REAR PANEL

Amana Residential Amana NA5331 Washer Parts Parts Diagram 05 - CAB TOP/LOADING DR & CTRL HOOD REAR PAN

Click on the part number to view part

Item	Original Part Number	Replaced By	Status	Part Description
1	32507	40038001		Bumper
2	27203		Not Available	ASSY,SCREW & WASHER
3	27149			Catch, Lid Switch
4	27626		Not Available	HINGE,HIDDEN
5	21752			Nut, 8-32 Hex Brilock
6	31314H		Not Available	LID,W/INSTRUCTIONS
"	31314L		Not Available	LOADING DOOR, ALMOND
"	31314W		Not Available	LOADING DOOR, WHITE
7	31230		Not Available	CONTROL HOOD REAR PANEL
8	27625			Bushing
9	32786		Not Available	BLEACH DISPENSER
10	Y00000000		Not Available	SEE NOTE CABINET
11	Y31644	27001200		Screw
12	56534			Barrel, Support
13	32808H		Not Available	CABINET TOP, HARVEST

13	32808H		Not Available	GOLD
"	32808L	32808LP		Assembly Top And Carton
"	32808W	32808WP		Assembly Top And Carton
14	24903		Not Available	STICKER,DISCONNECT POW
15	Y00000000		Not Available	SEE NOTE GROUND WIRE, GREEN
16	52909			Screw, 10B-16 X 1/2 HeX
17	21903	211881		Grommet, Cord Part Not Used-Gas Models Only
18	23962	W10116760		Screw

the laundry company®
the laundry company®
the laundry company®