Amana NA5331 15 - POWER CORD & WIRE TERMINALS

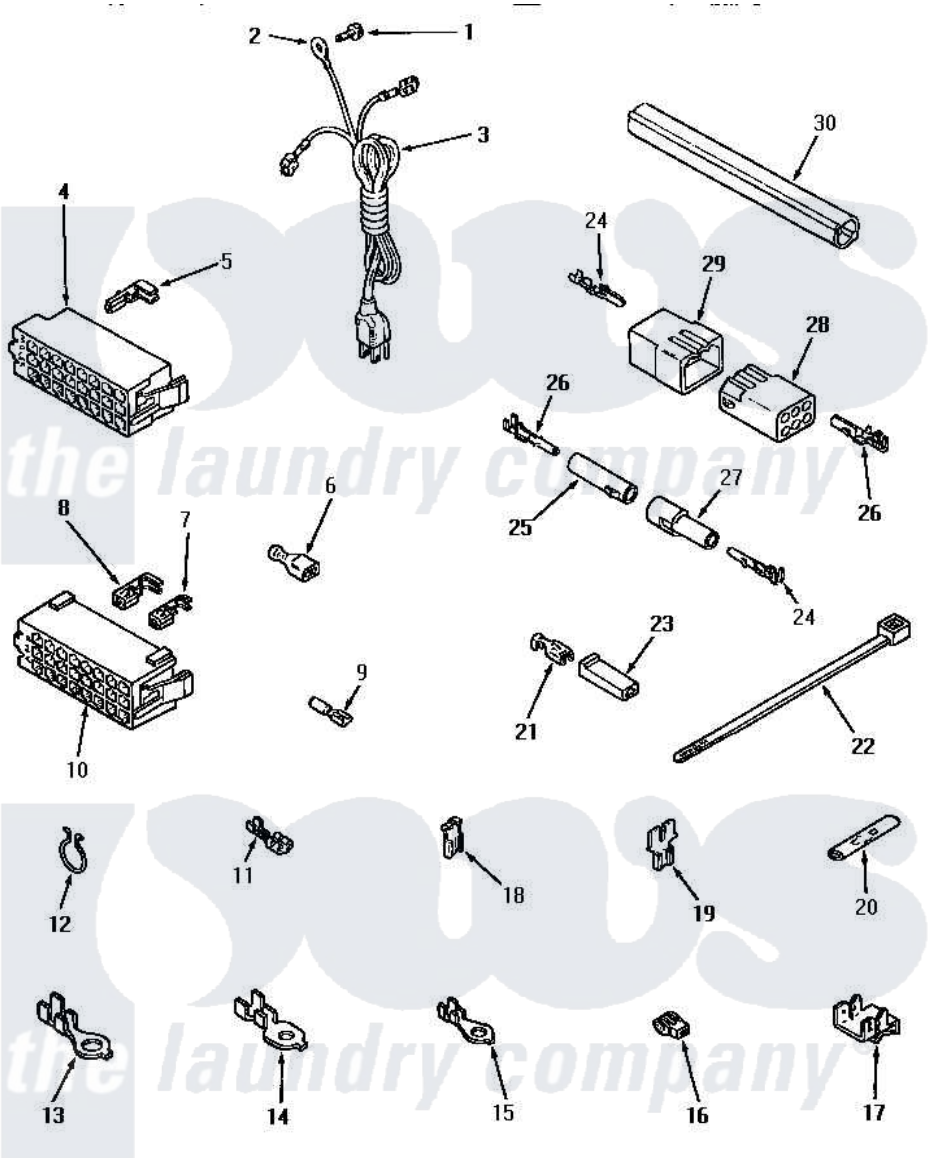

POWER CORD AND WIRE TERMINALS

Amana Residential Amana NA5331 Washer Parts Parts Diagram 15 - POWER CORD & WIRE TERMINALS
Click on the part number to view part

Item	Original Part Number	Replaced By	Status	Part Description
1	52909			Screw, 10B-16 X 1/2 HeX
2	Y00000000		Not Available	SEE NOTE GOUND WIRE -- (GREEN)
3	22660		Not Available	POWER CORD AND PLUG
4	34123			Housing, LH -24 Position
"	32746			Housing, RH-24 Positi
5	Y00188			Molex Terminal
6	Y00163	285432		Terminal
"	Y00165			Insulated Spade Terminal
7	00180		Not Available	TERMINAL,FEMALE
8	00183		Not Available	TERMINAL,FEMALE 2-WIRE
9	Y00215			Barrel Insulated Spade
"	Y00214		Not Available	BARREL INSULATED SPADE(18 GAUG (1/4 INCH-18 GAUGE WIRE)
10	28856		Not Available	HOUSING,24 POSITION
11	Y00119		Not Available	SPADE TERMINAL(18 GAUGE) (1/4 INCH-(1) 18

				GAUGE WIRE)
"	Y00121		Not Available	SPADE TERMINAL(12 GAUGE) (1/4 INCH-(2) 18 GAUGE WIRES O
12	51291			Clip, Wire
13	Y00113		Not Available	TERMINAL,RING-1/4 STUD
14	Y00111			Ring Terminal No.10 No.10 18 Gauge Wires Or
15	00110			No.10 18 Gauge Wire
16	70210		Not Available	INSULATOR,BLUE
17	Y00161	B5733302		Clip, Ground
18	Y00120			Terminal, Flag-1/4 Fema
19	29673		Not Available	DOUBLE CONNECTOR
20	21091		Not Available	CONNECTOR TWO 1/4 INCH MALE
21	Y00115			Lock In Spade Terminal (18 Gaug (1/4 Inch-(1) 18 Gauge Wire)
22	55881	M0321209		Tie-Electrical
23	90789			Connector
24	Y00116			Terminal, Pin-Male
25	26301			Receptacle, Molex
26	Y00117	5011-XX		093 Female Socket
27	26302		Not Available	PLUG,1 CIRCUIT
28	26708			Receptacle, 6 Circuit
29	23041			Plug, 6 Circuit
30	33087		Not Available	ENCLOSURE,WIRE HARNESS

the laundry company®