Amana NE6333 03 - FR BLKHD, AIR DUCT, FELT SEAL & CYLINDER

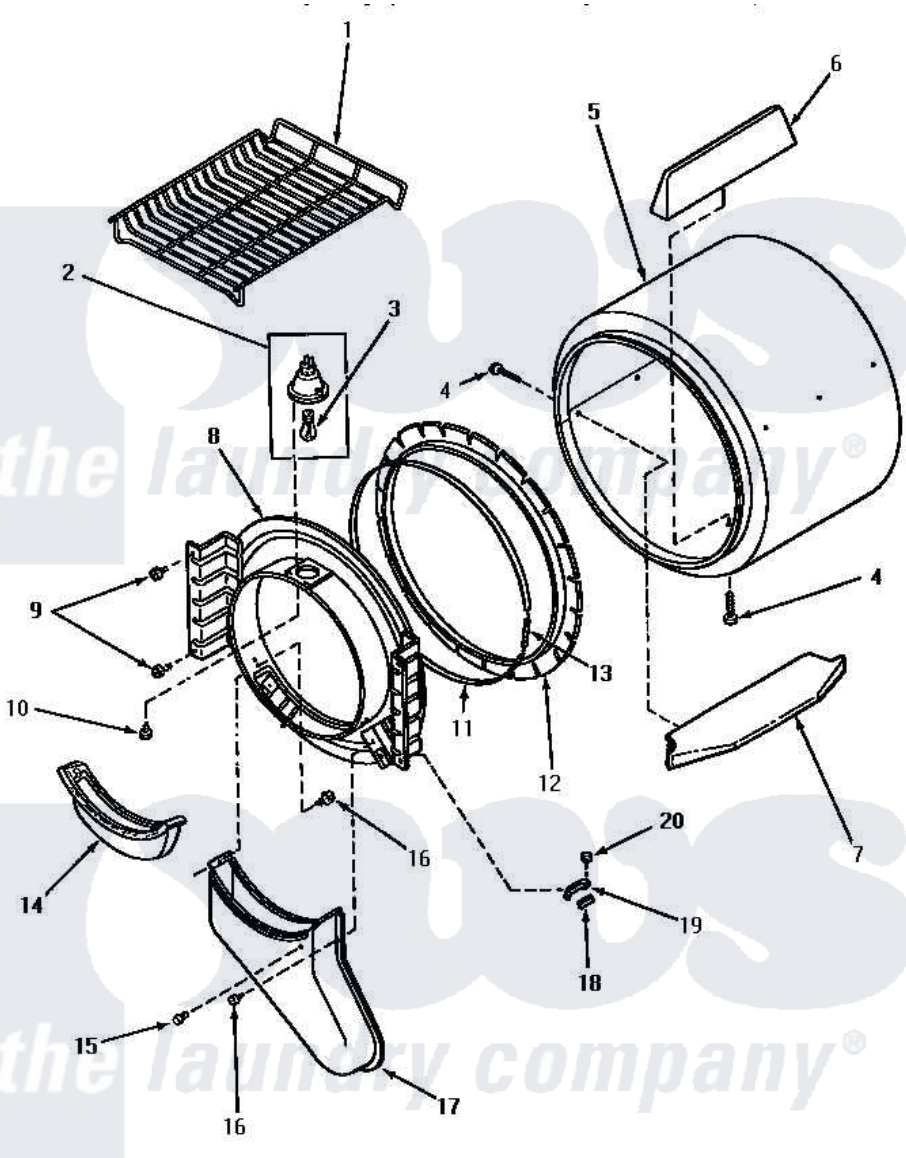

FRONT BULKHEAD, AIR DUCT, FELT SEAL AND CYLINDER

Amana Residential Amana NE6333 Washer Parts Parts Diagram 03 - FR BLKHD, AIR DUCT, FELT SEAL & CYLINDER
Click on the part number to view part

Item	Original Part Number	Replaced By	Status	Part Description
1	58846		Not Available	RACK,DRYING
4	56131		Not Available	SCREW,10BT X 1 TAPPING
5	60645P		Not Available	ASSY,CYLINDER PACK
"	61073P		Not Available	ASSY,CYLINDER-WHITE
6	Y61399		Not Available	BAFFLE,CYLINDER-SHORT-
7	Y61027		Not Available	BAFFLE,CYLINDER-EXTEND
8	60774P		Not Available	ASSY BULK HEAD
9	33562	27001200		Screw
10	31260			Screw, No.8 X 3/8 Ind H
11	Y56090		Not Available	SEAL STRAP
12	56088			Assembly, Seal
13	52130	502496		Adapter, Strain Relief
14	61376P			Filter, Lint-White W/Inst.
15	56938		Not Available	BUMPER
16	Y33561	489464		Screw
17	60786			Assembly, Air Duct-Front

18	58049		Pad, Thin
19	61448		Glide, Cylinder-Rulon F
20	23962	W10116760	Screw

the laundry company®

the laundry company®

the laundry company®