Amana NE8333 10 - REAR BLKHD, FELT SEAL & CYLINDER ROLLER

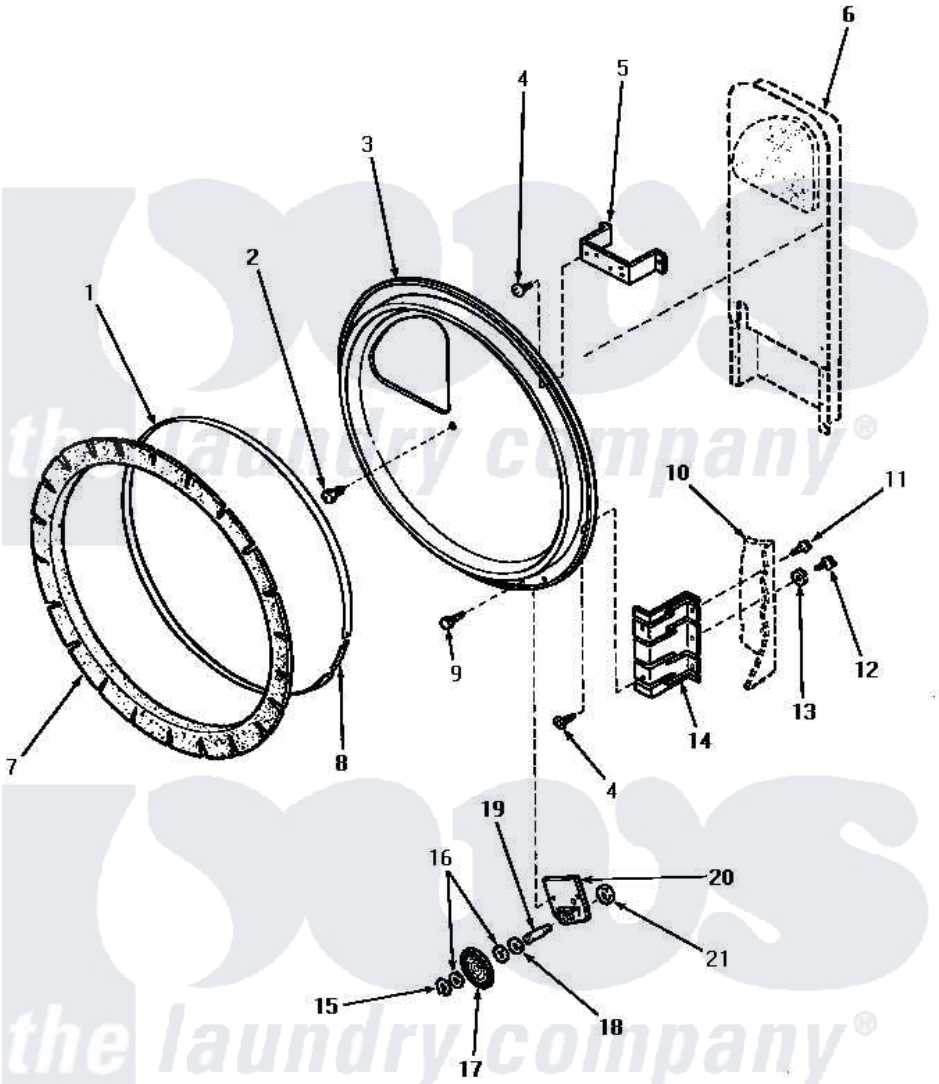

REAR BULKHEAD, FELT SEAL AND CYLINDER ROLLER

Amana Residential Amana NE8333 Washer Parts Parts Diagram 10 - REAR BLKHD, FELT SEAL & CYLINDER ROLLER

Click on the part number to view part

Item	Original Part Number	Replaced By	Status	Part Description
1	Y56090		Not Available	SEAL STRAP
2	Y33561	489464		Screw
3	61135P		Not Available	ASSY,REAR BULKHEAD
4	56078	M400664		SCrew Tap Trs Cr Rec 1016AB
5	60823P			Bracket, Terminal Block
6	Y00000000		Not Available	SEE NOTE HEAT DUCT
7	56088			Assembly, Seal
8	52310			Spring
9	51780	3390631		Screw, 10-16 X 3/8
10	Y00000000		Not Available	SEE NOTE CABINET
11	33562	27001200		Screw
12	52909			Screw, 10B-16 X 1/2 HeX
13	51474		Not Available	WASHER,13/64IDX1/2ODX.
14	56055		Not Available	BRACKET,BULKHEAD-REAR
15	23748			Ring, Retaining

16	52549			Washer, 501 ID X3/4 Odx
17	56457	62649P		Roller- CY
18	23886		Not Available	WASHER,.578IDX1.25ODX1
19	56461			Shaft
20	56042		Not Available	BRACKET,CYLINDER ROLLER
21	56156	358160		Nut

the laundry company®
the laundry company®
the laundry company®