Amana NGD7300WW0 02 - CABINET PARTS

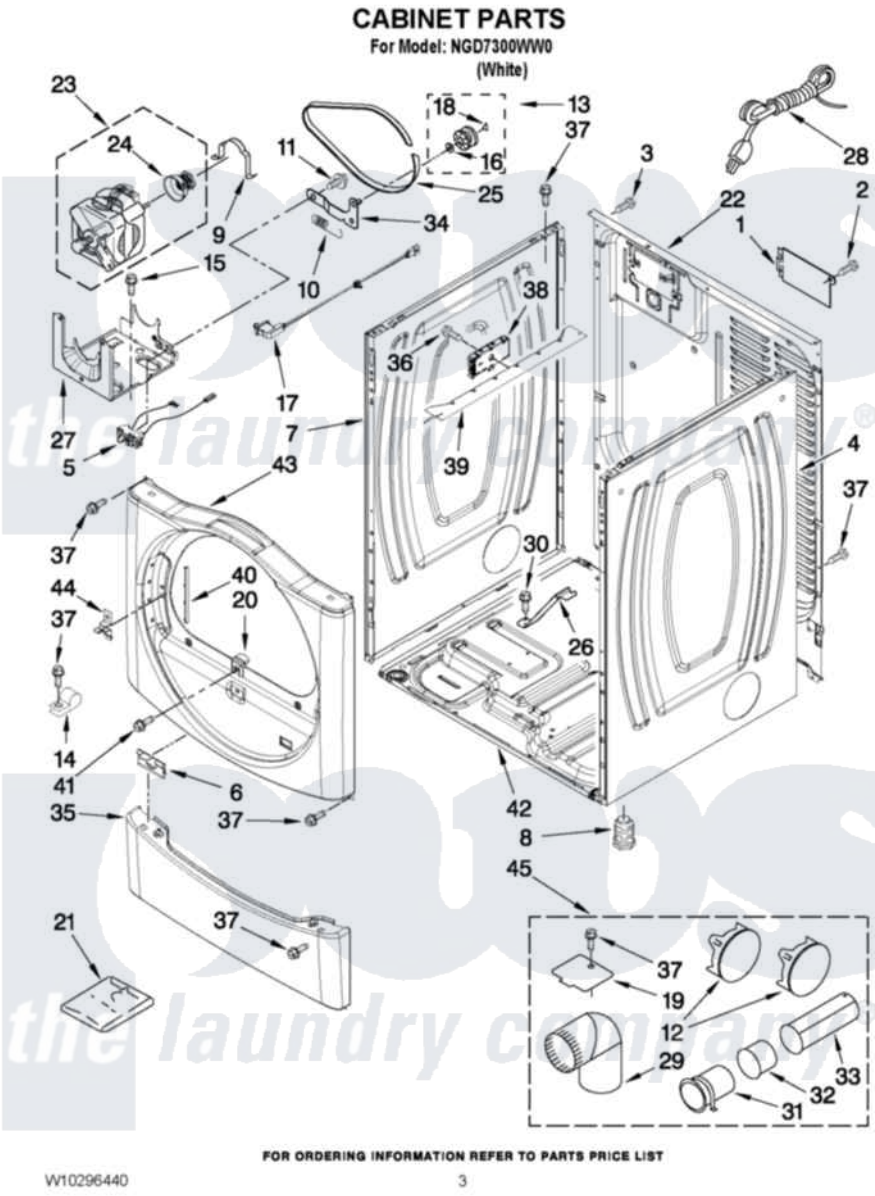

Amana Residential Amana NGD7300WW0 Dryer Parts Parts Diagram 02 - CABINET PARTS
Click on the part number to view part

Item	Original Part Number	Replaced By	Status	Part Description
1	8317340			Cover, Terminal Block
2	3390814	90767		Screw, 8A X 3/8 HeX Washer Head Tapping
3	8533974	4331106		Screw, No.10-32 X 7/16
4	8565048			Panel, Side
5	W10246525	W10314253		Switch, Assembly Broken Belt
6	8519459			Clip, Toe Panel
7	8565054			Panel, Side
8	3392100	49621		Feet-Leveling
"	279810			Foot-Optional
9	660658			Clamp, Motor Mounting 343481 685441
10	3387374			Spring, Idler
11	3389420			Retainer-Idler 1/4-20 X 1/16
12	49252			Plug, Multivent
13	3388672	279640		Pulley-Idr
14	3978776			Bracket, Gas Pipe Switch

15	343641	681414	Screw, 10AB X 1/2
16	233520		Washer, Thrust
17	W10128087	W10318609	Switch, Assembly Door
18	W10121334		Washer, Thrust
19	8066115	3394331	Plate Cover
20	8565083		Ramp, Door
21	8572546		Odor Remover
22	8565059		Panel, Rear
23	8538263	279787	Motor-Drve
24	8578220		Pulley, Motor
25	3387610	661570	Belt
26	8529757		Bracket, Burner
27	W10242878		Bracket, Motor Mounting
28	3401401	3401402	Cord, Power
29	49026		4" - 90° Elbow
30	693995		Screw, Hex Head
31	8563747		Exhaust Pipe Medium Pipe
32	8563750		Exhaust Pipe
33	8563749		Exhaust Pipe
34	3388674	W10118756	Idler Bracket
35	8540621		Panel, Toe
36	8533971	90767	Screw, 8A X 3/8 HeX Washer Head Tapping
37	3390647	488729	Screw
38	W10235613		Board, Control
39	8563727		Bracket, Control
40	W10085210		Label-Hinge Hole Cover Front Panel
41	3357011	308685	Side Trim)
42	8565046		(BROKEN BELT BASE, CABINET SWITCH)
43	8565070		Front Panel
44	8565122		Strike, Door
NI	279818	W10470674	Dryer Exhaust Kit

the laundry company®