Amana TAA300 (BOM: P7704001W) 11 - POWER CORD

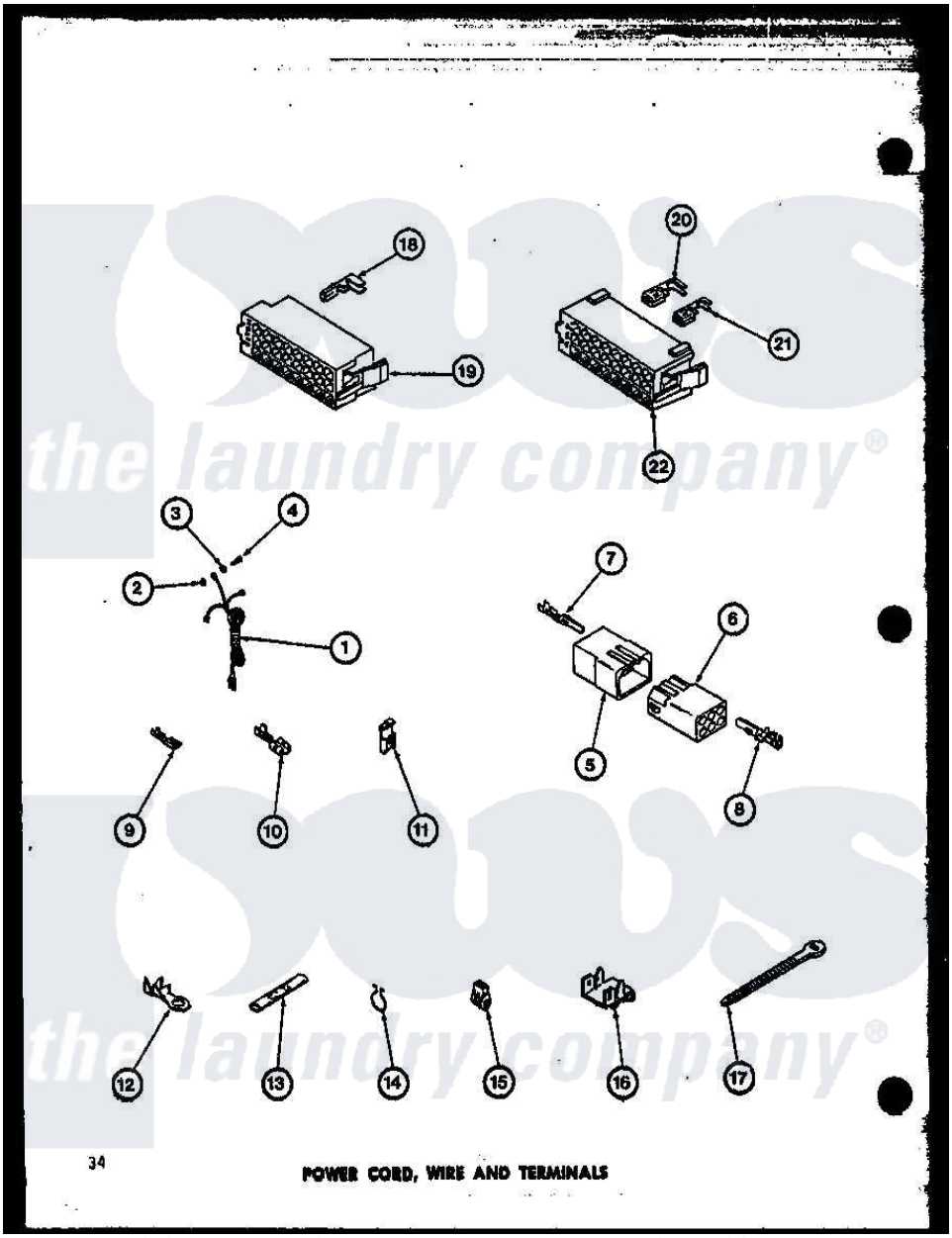

Amana Residential Amana TAA300 (BOM: P7704001W) Washer Parts Parts Diagram 11 - POWER CORD
Click on the part number to view part

Item	Original Part Number	Replaced By	Status	Part Description
1	R0605001		Not Available	CORD, LEAD-IN
2	R0601003		Not Available	NUT
3	R0600503		Not Available	LOCKWASHER
4	R0600006	20267		Screw, 10-24 X 3/8 Round
5	R0605009	23041		Plug, 6 Circuit
6	R0605010	26708		Receptacle, 6 Circuit
7	R0605003	Y00116		Terminal, Pin-Male
8	R0605004	5011-XX		093 Female Socket
9	R0605002	00112		Terminal, Spade-3/16 Fe
10	R0605005		Not Available	TERMINAL
11	R0605006	Y00120		Terminal, Flag-1/4 Fema
12	R0605007		Not Available	TERMINAL
13	R0605008		Not Available	CONNECTOR
14	R0601522	51291		Clip, Wire
15	R0605011		Not Available	INSULATOR
16	R0601507	B5733302		Clip, Ground

17	R0601521	M0321209		Tie-Electrical
18	R0605050	Y00188		Molex Terminal
19	R0605053		Not Available	HOUSING MOLEX
20	R0605051		Not Available	TERMINAL AMP
21	R0605052		Not Available	TERMINAL AMP
22	R0605054		Not Available	HOUSING AMP
NI	R0605044	28900		Assembly Wiring Harness
"	R0605015		Not Available	WIRE HARNESS
"	R0605045		Not Available	WIRE HARNESS LIB SW

the laundry company®
the laundry company®
the laundry company®