Crosley CDG20T6W 02 - CONTROL PANEL

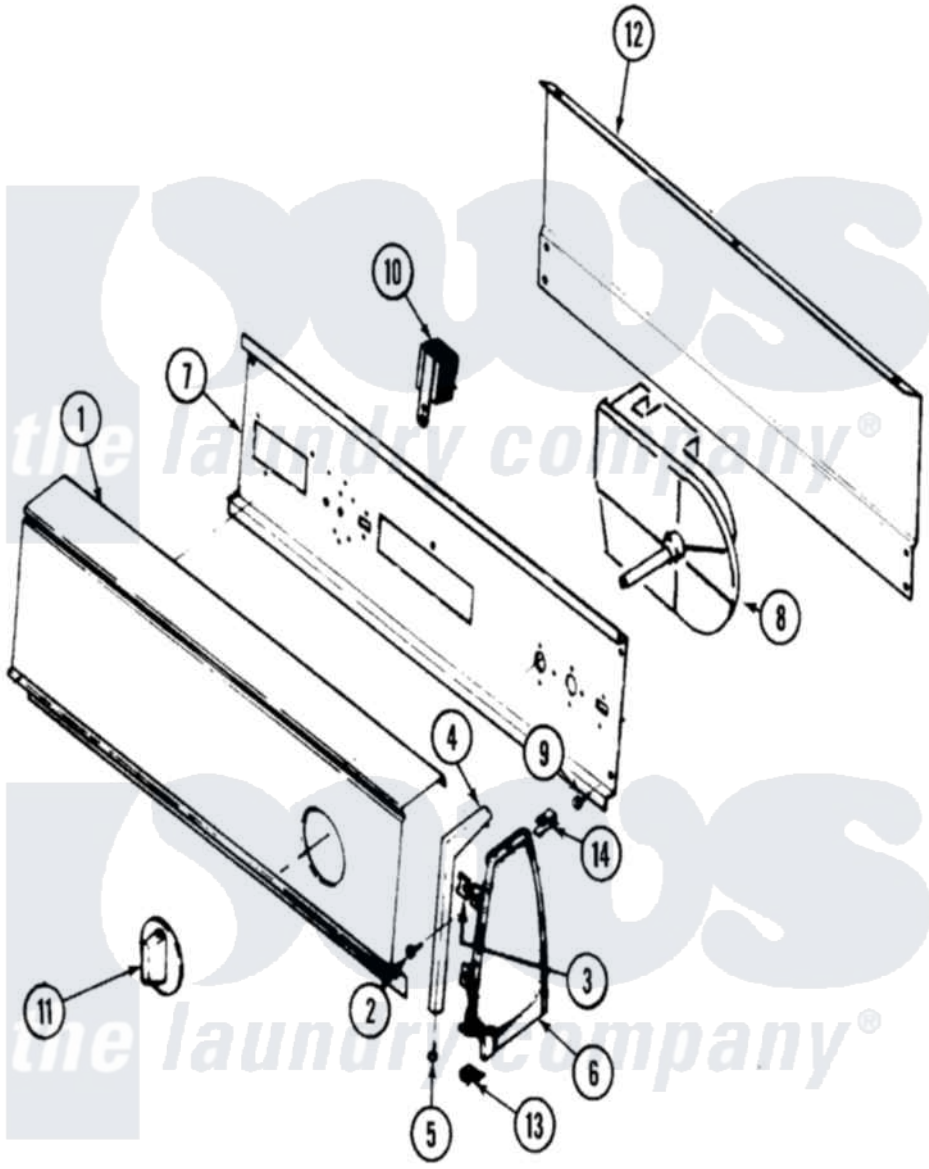

Crosley Residential Crosley CDG20T6W Dryer Parts Parts Diagram 02 - CONTROL PANEL
Click on the part number to view part

Item	Original Part Number	Replaced By	Status	Part Description
1	31001157		Not Available	PANEL, CONTROL (WHT)
"	25-3457			Screw, Sems
2	25-7793			Screw
3	25-7702			Speedclip, End Cap To Control Panel
4	53-0278		Not Available	TRIM, END CAP (LT)
"	53-0277		Not Available	TRIM, END CAP (RT)
5	25-7760			Screw
6	35-2487	21001451		Cap- End
"	35-2488	21001452		Cap- End
7	25-3092	90767		Screw, 8A X 3/8 HeX Washer Head Tapping
"	53-1676			Shield, Control
"	53-2504	31001193		Pad, Shield
8	53-1758			Timer
9	25-7435	33002917		Screw, No.10-16
10	53-1639			Buzzer Assembly

"	25-3092	90767		Screw, 8A X 3/8 HeX Washer Head Tapping
11	53-2574		Not Available	TIMER KNOB
12	35-2688	21001460		Shield, Rear
"	25-3092	90767		Screw, 8A X 3/8 HeX Washer Head Tapping
"	25-3457			Screw, Sems
13	25-7851			Speedclip, End Cap To Top
"	25-2219			Screw
14	25-7852			Speedclip, Rr Shld To End Cap
NI	16002080		Not Available	GUIDE, QUICK REF - CROSLEY
"	53-2490		Not Available	MANUAL, USE & CARE
"	31001008			Manual, Use And Care

the laundry company®
the laundry company®
the laundry company®