Crosley CW20P8D 08 - TUB (CW20P8D)

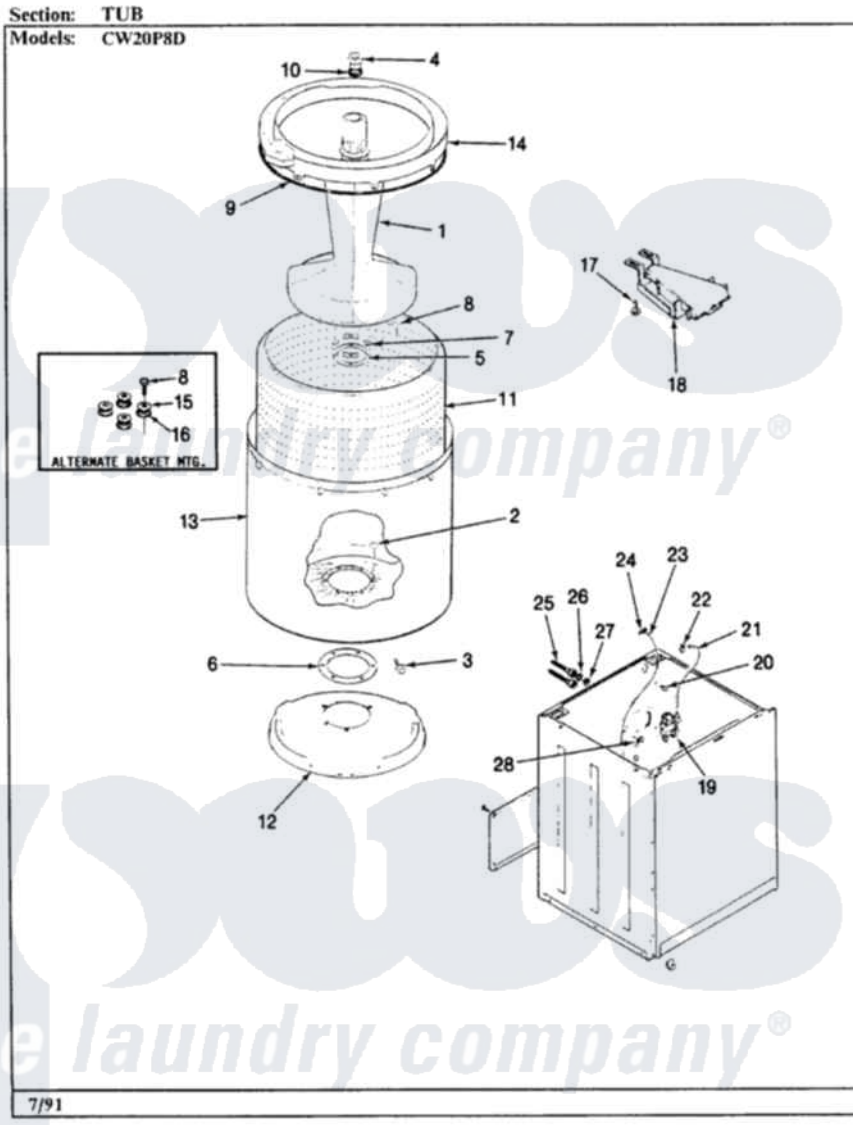

Crosley Residential Crosley CW20P8D Washer Parts Parts Diagram 08 - TUB (CW20P8D)
Click on the part number to view part

Item	Original Part Number	Replaced By	Status	Part Description
1	35-2456	33-4352		Agitator
2	35-2062	21001063		Screw, Shoulder
3	25-7914	22002933		Screw
4	33-6241			Cap
5	33-8959			Gasket
6	35-2061			Gasket, Tub To Housing
7	33-8799		Not Available	REINF PLATE
8	25-7783	4356852		Screw
9	35-2328			Seal, Tub Top
10	25-7330			Rubber Washer
11	35-2508		Not Available	BASKET WHITE
12	35-2529		Not Available	TUB SUPPORT
13	35-2038			Tub
14	35-2262		Not Available	SHIELD, TUB TOP
"	35-2034		Not Available	TOP, TUB
15	25-7921		Not Available	STEEL WASHER

16	25-7922			Cork Washer
17	25-3092	90767		Screw, 8A X 3/8 HeX Washer Head Tapping
18	35-2051	21001760		Flume Assembly / Water Diverter
19	25-7220			Clip, Cabinet Top
"	35-2377	35-2375		Valve, Water Mixing-230V
20	25-7867	596669		Clamp, Manifold
21	35-2378	12002749		Hose, Flume Kit
22	25-7867	596669		Clamp, Manifold
23	35-2321	21001748		Hose, Pressure Switch
"	35-2261		Not Available	PAD, PRESSURE SWITCH HOSE
24	33-6099			Clamp
25	33-7046	89503		Hose-Inlet
"	35-0873	76313		Hosefill
26	25-7048			Washer
27	33-7313	33-4264N		Strainer And Washer Kit
28	33-6099			Clamp

the laundry company®

the laundry company®