Hoover A1410 06 - EXTERIOR (REV. E)

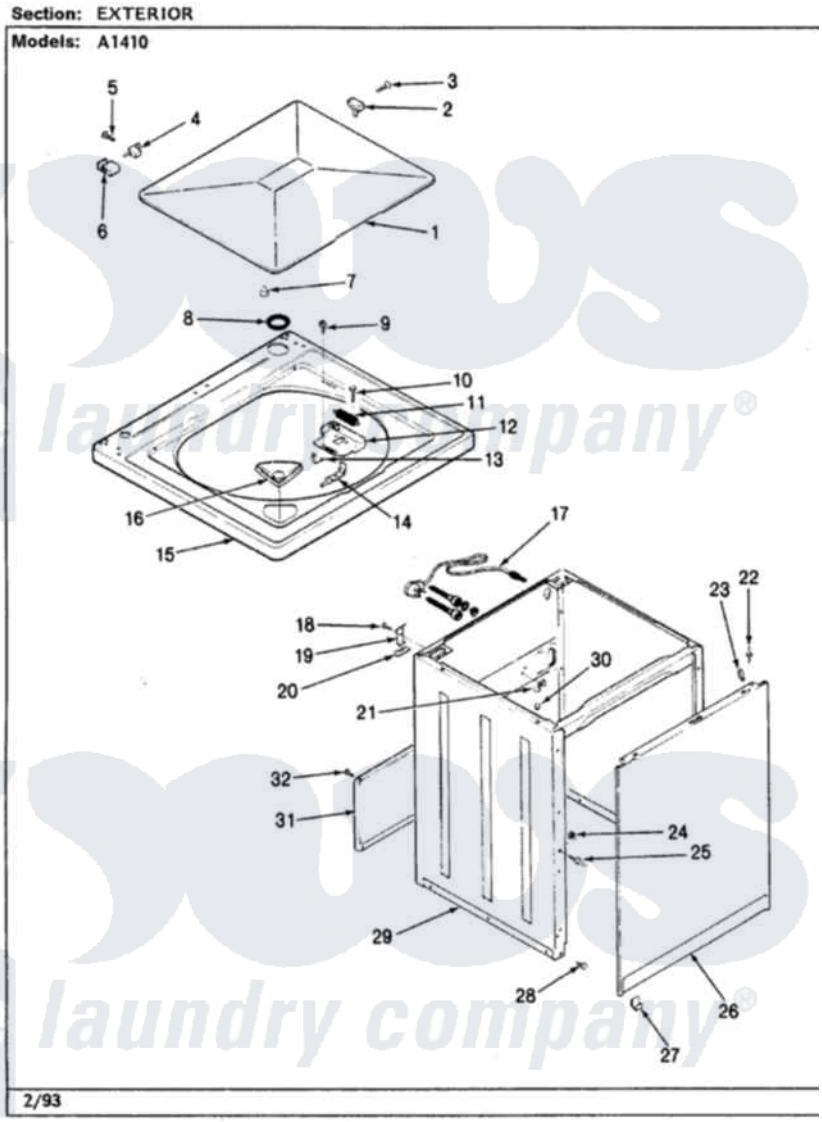

Hoover Residential Hoover A1410 Washer Parts Parts Diagram 06 - EXTERIOR (REV. E)
Click on the part number to view part

Item	Original Part Number	Replaced By	Status	Part Description
1	35-2343	35-2026		Lid
2	25-7436			Nylite Washer
"	43-0057			Actuator, Door Switch
3	25-7438			Screw
4	25-7086	Y0308025		Washer, Stainless Steel
"	35-2045			Pin, Hinge
5	25-7893			Screw
6	35-2044			Hinge, Lid
7	35-0581			Bumper, Door
8	35-2063			Bushing, Insulator
9	25-7463	7101P012-60		Screw
10	25-7437	40040701		Screw, Tapping No.6b-20
11	33-9064	12001187		Kit, Lid Switch Assembly
"	33-8911	12001187		Kit, Lid Switch Assembly
12	33-8289	12001187		Kit, Lid Switch Assembly
13	25-7878			Clip

14	33-9063	12001187		Kit, Lid Switch Assembly
15	35-2739			Top, Cabinet
16	33-9906	21001167		Dispenser, Bleach
17	35-1007			Strain Relief
"	35-0680		Not Available	CORD, POWER
18	25-7893			Screw
19	33-7450	35-2846		Hinge, Cabinet Top
20	33-0930			Pad, Top Hinge
21	33-6099			Clamp
22	53-0643			Pin, Locator
23	34-9701			Guide, Cabinet
24	25-0224	3400029		Nut, Adapter Plate
25	53-0643			Pin, Locator
26	35-2084			Panel, Front
27	53-0120			Clip, Front Panel
28	33-2653			Bumper, Cabinet
29	35-2106	21001871		Cabinet
30	33-2653			Bumper, Cabinet
31	35-2108	21001871		Cabinet
32	25-7733	681414		Screw, 10AB X 1/2

the laundry company®
the laundry company®
the laundry company®