Magic Chef YG209KV 01 - CABINET

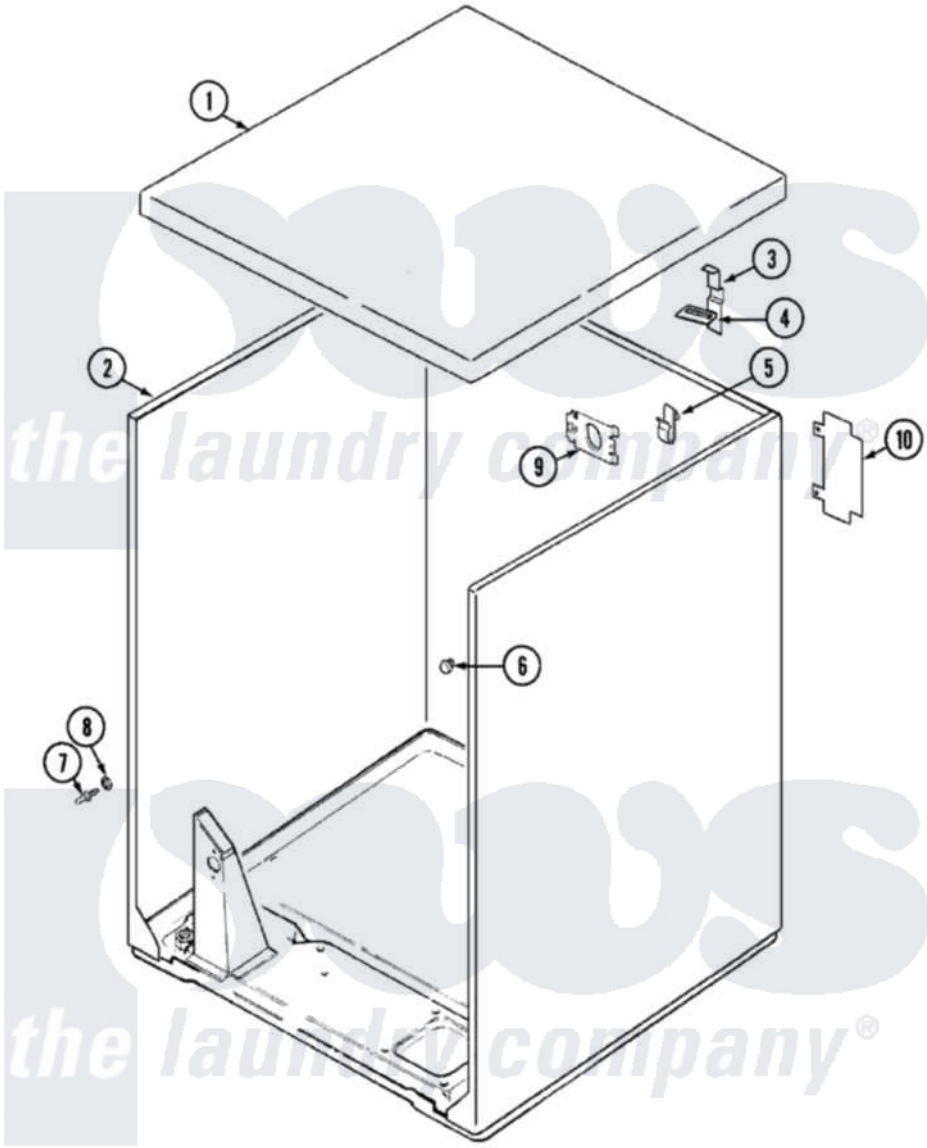

Magic Chef Residential Magic Chef YG209KV Dryer Parts Parts Diagram 01 - CABINET
Click on the part number to view part

Item	Original Part Number	Replaced By	Status	Part Description
1	53-1711		Not Available	CABINET TOP (DRYER)
2	53-2147	31001714		Cabinet And Base Assembly
3	63-5712			Hinge, Cabinet Top
4	33-0930			Pad, Top Hinge
"	25-3092	90767		Screw, 8A X 3/8 HeX Washer Head Tapping
5	25-3034			Clip, Wiring
6	33-2653			Bumper, Cabinet
7	53-0643			Pin, Locator
8	53-0200			Sleeve, Locator Pin
"	25-0224	3400029		Nut, Adapter Plate
9	53-0135		Not Available	SUPPORT, POWER CORD
10	53-0136			Cover, Supply Cord
"	25-7857	90767		Screw, 8A X 3/8 HeX Washer Head Tapping