Maytag CYE3004AGW 02 - CONTROL PANEL

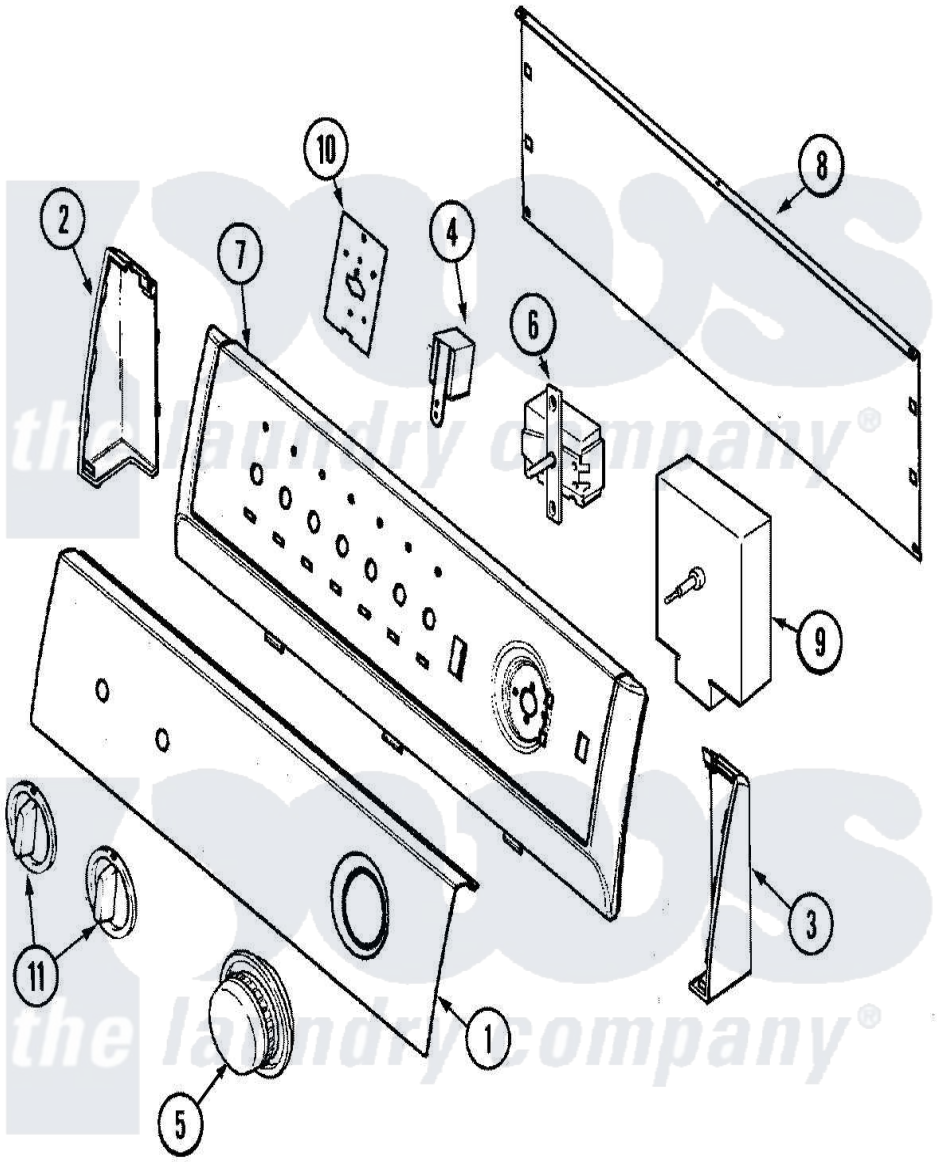

Maytag Residential Maytag CYE3004AGW Dryer Parts Parts Diagram 02 - CONTROL PANEL
Click on the part number to view part

Item	Original Part Number	Replaced By	Status	Part Description
1	31001739		Not Available	PANEL, CONTROL (WHT)
2	21001629	21001546		Endcap, Panel
3	21001636	21001547		Endcap, Panel
4	31001448			Buzzer, Cycle Signal
5	31001388			Knob/Skirt, Timer
6	31001449			Switch, Selector
7	21001635	21001552		Frame , Control Panel
8	31001742			Shield, Rear And Insulator
9	31001514			Resistor Assembly
"	53-2391			Timer
10	21001517			Shield, Control
11	21001544			Knob, Selector
NI	21001978			Lead Assembly
"	31001740			Lead Assembly
"	31001741		Not Available	LEAD ASSEMBLY (BUZZER)
"	31001493			Harness, Wire