Maytag DG24CT 01 - CT CONTROL PANEL

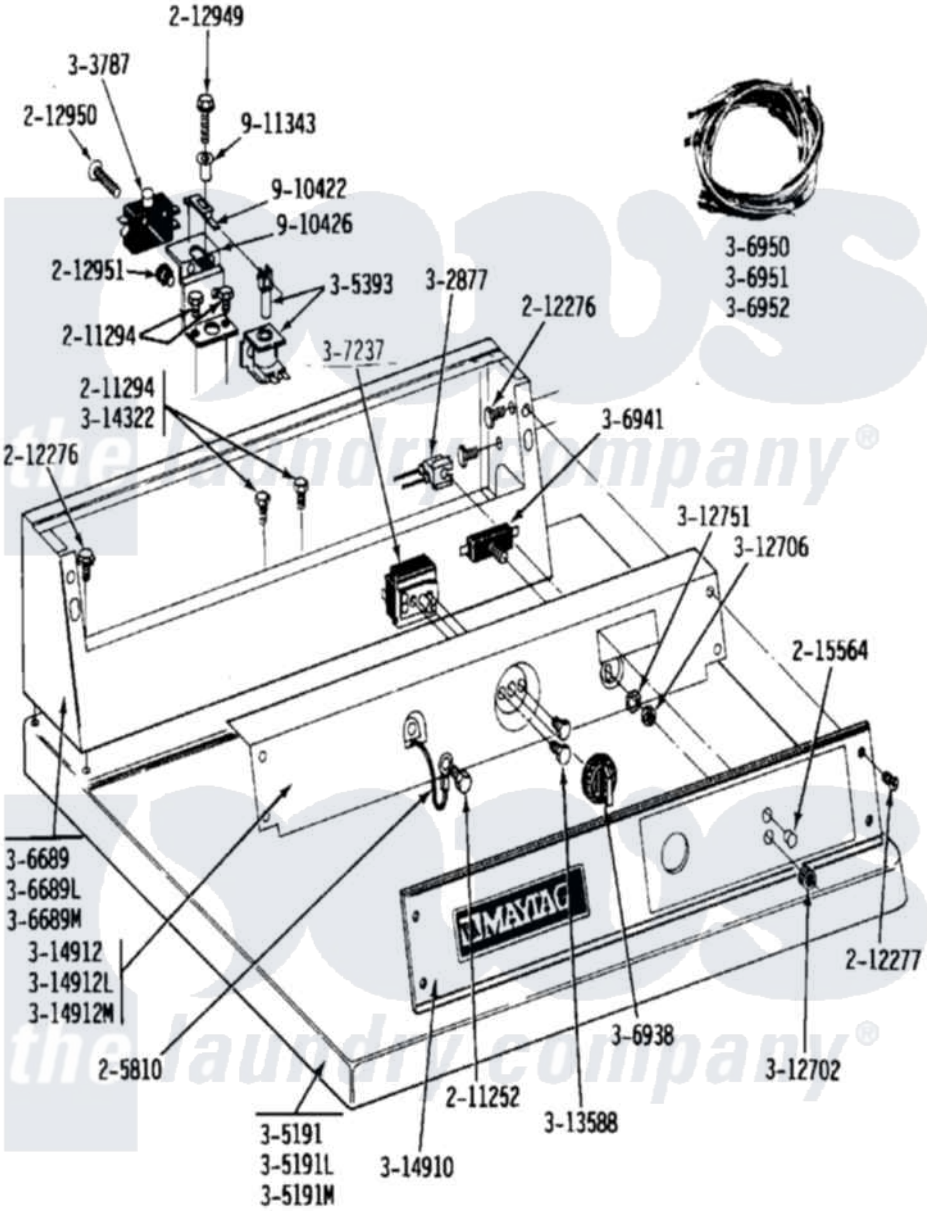

Maytag Residential Maytag DG24CT Dryer Parts Parts Diagram 01 - CT CONTROL PANEL
Click on the part number to view part

Item	Original Part Number	Replaced By	Status	Part Description
001	205810			Wire, Ground
002	211252			Screw, Ground Wire
003	211294	90767		Screw, 8A X 3/8 HeX Washer Head Tapping
004	212276	W10116760		Screw
005	212277			Screw, No.8 X 1/2 Inch
006	212949	22001866		Screw, Relay
007	212950	M0227520		Screw-Tc No.6-32 X 13/16", Preform SwiTch
008	212951			Screw, No.6-32 X 1/4 Inch
009	215003			Fastener, Panel And Bracket
010	215564			Lens, Indicator Light
011	NLA		Not Available	PILOT LIGHT
012	Y303787		Not Available	SWITCH FOR RELAY
013	Y305191		Not Available	TOP COVER-WHITE
014	NLA		Not Available	TOP COVER-ALMOND
015	NLA		Not Available	TOP COVER-HARVEST

015	NLA		Not Available	WHEAT
016	NLA		Not Available	CONTROL COVER (WHT)
017	NLA		Not Available	CONTROL COVER ASSY---- NA
018	NLA		Not Available	CONTROL COVER ASSY
019	306938			Knob, Selector Switch
020	307237	W10327105		Switch, Cycle Selection
021	306941	W10149462		Switch, Push-To-Start
022	NLA		Not Available	MAIN WIRE HARNESS - DG
025	Y312702			Knurled Nut, Start Switch
026	Y312706	422617		Nut
027	312751			Lockwasher, Start Switch
028	Y313588	488234		Screw 8-32 X 1/4
029	Y314322	211251		Screw, Transformer
030	NLA		Not Available	CONTROL PANEL COMMERCIAL DRYER
031	314912		Not Available	BRACKET, CONTROL PANEL (WHT)
032	NLA		Not Available	BACK UP PLATE-ALMOND
033	NLA		Not Available	BACK UP PLATE-HARVEST WHEAT
034	NLA		Not Available	SPRING LEVER FOR RELAY
035	NLA		Not Available	RELAY BRACKET
036	NLA		Not Available	SPACER FOR ADVANCE RELAY

the laundry company®