Maytag DG482 07 - REAR VIEW

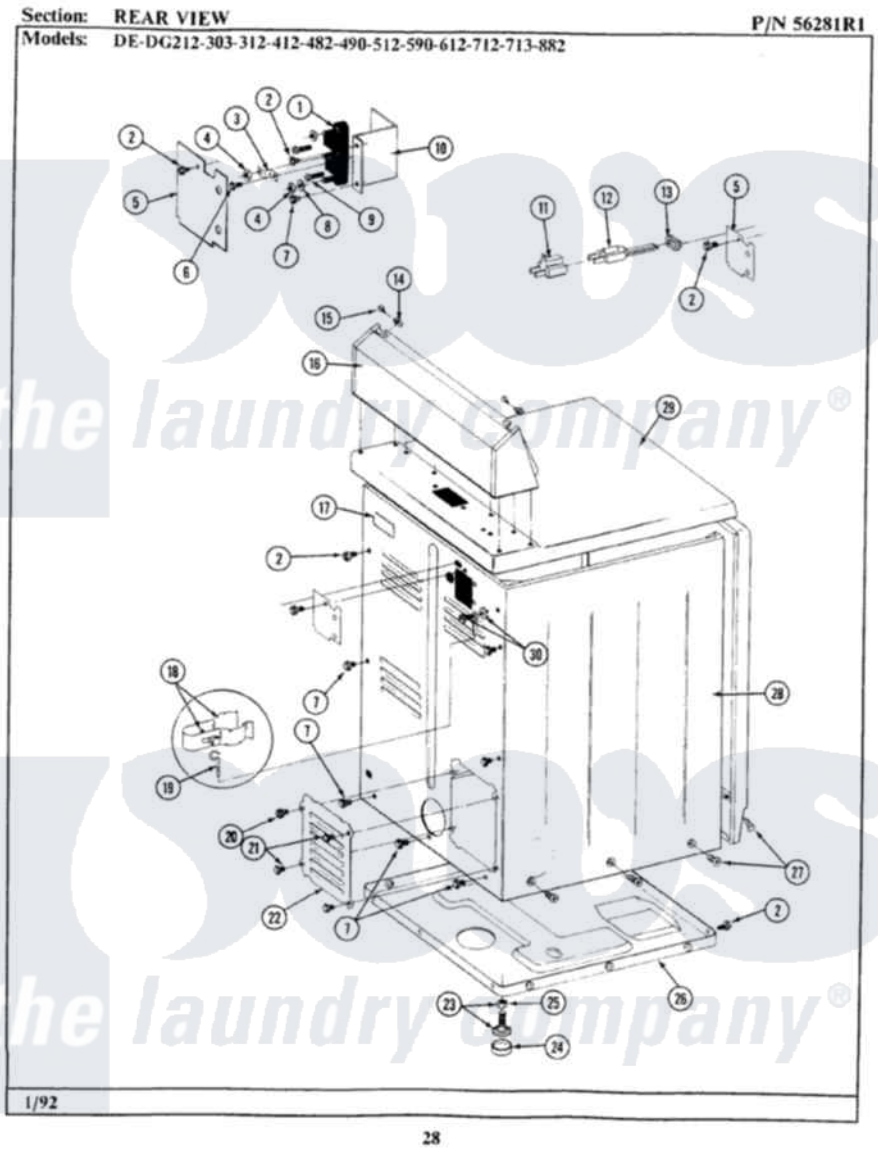

Maytag Residential Maytag DG482 Dryer Parts Parts Diagram 07 - REAR VIEW
Click on the part number to view part

Item	Original Part Number	Replaced By	Status	Part Description
2	Y313561			Screw----NA
5	Y312905		Not Available	COVER, TERMINAL
7	Y310632	1163839		Screw
11	Y201808			Converter
12	302521		Not Available	CORD, POWER PART NOT USED-GAS MODELS ONLY
13	211881			Grommet, Cord Part Not Used-Gas Models Only
14	215075			Fastener, Control Panel To Console
15	210932			Screw, No.8 X 9/16 Ctsk Note: Screw, Inlet Duct
16	Y305193			Console
17	214519			LABEL, ELECTRICAL INSTR. PART NOT USED-GAS MODELS ONLY
18	301548			Clamp, Ground Wire
19	311155			Ground Wire And Clamp
20	Y313559			Screw

21	211294	90767		Screw, 8A X 3/8 HeX Washer Head Tapping
22	Y312951		Not Available	ACCESS COVER, BACK
23	Y305086			Adjustable Leg And Nut
24	Y314137			Foot, Rubber
25	Y052740	62739		Nut, Lock
26	Y303361		Not Available	BASE ASSY. (UPPER & LOWER)
27	213007			Xfor Cabinet See Cabinet, Back
28	305302		Not Available	CABINET-WHITE
29	307104			Top Cover Assembly
30	303846	22003781		Screw, Ground Strap

the laundry company®
the laundry company®
the laundry company®