Maytag GDG24CT 07 - LINT SCREEN, TUMBLER (FRONT & BACK)

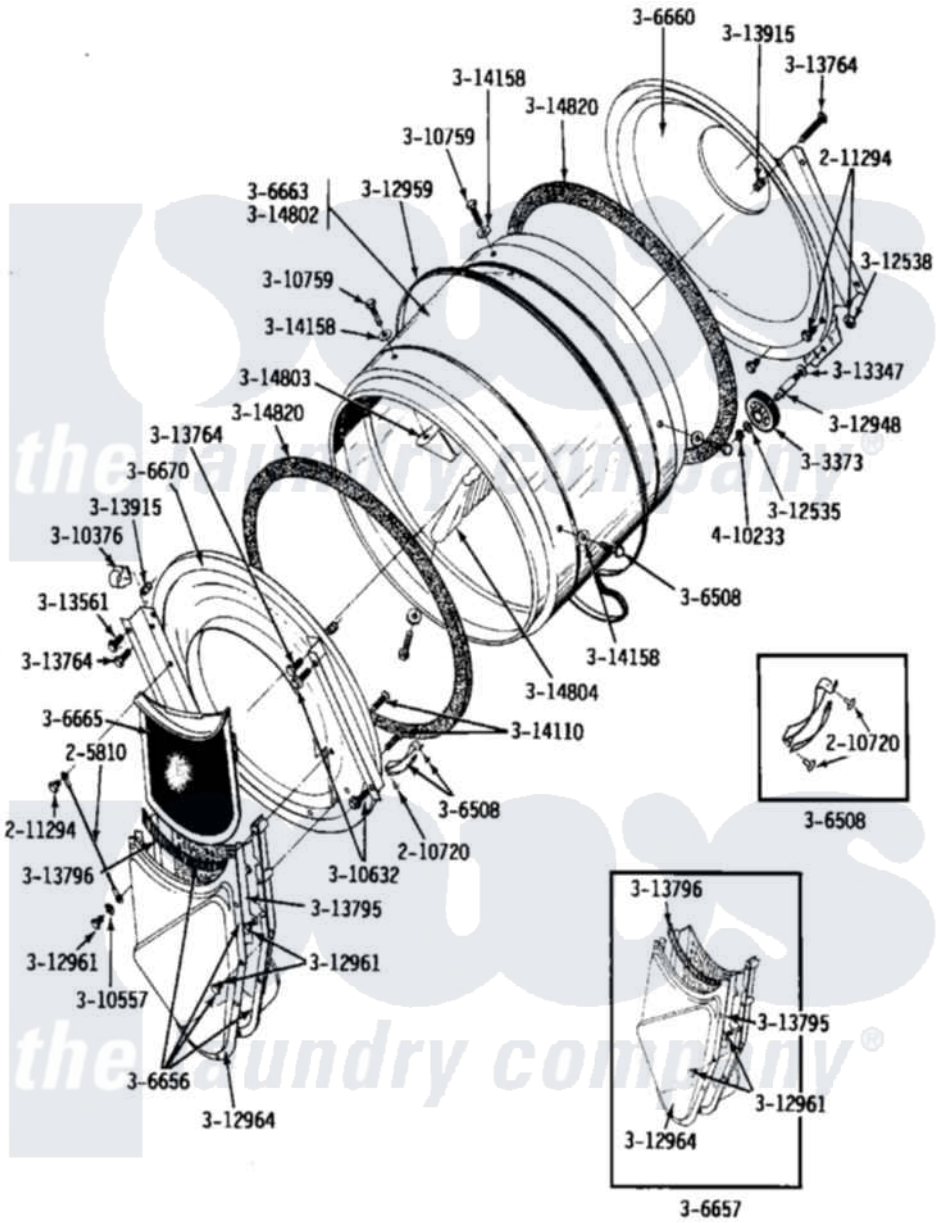

Maytag Residential Maytag GDG24CT Dryer Parts Parts Diagram 07 - LINT SCREEN, TUMBLER (FRONT & BACK)
Click on the part number to view part

Item	Original Part Number	Replaced By	Status	Part Description
001	205810			Wire, Ground
002	210720			Rivet, Bearing To Tumbler Frnt
003	211294	90767		Screw, 8A X 3/8 HeX Washer Head Tapping
004	Y303373	12001541		Drum Roller/Washer Assembly--W
005	306508			Tumbler Bearing Kit ----W
006	306656		Not Available	OUTLET DUCT & GRID ASSEMBLY
007	306657		Not Available	OUTLET DUCT & GRID
008	Y306660	33001106		Back, Tumbler
009	306663		Not Available	TUMBLER W/BAFFLES
010	Y306665	33001003		Screen, Lint
NI	NLA		Not Available	TUMBLER FRONT----NA
012	Y310376			Clip, Door Switch Harness
013	310557			Washer
014	Y310632	1163839		Screw

015	Y310759			Screw, Tumbler Baffles
016	312535			Washer, Vault Mounting Brk.
017	312538	33001443		Nut, Hex
018	Y312948	6-3129480		Shaft- Tumbler
019	Y312959			Poly "V" Belt For Tumbler
020	Y312961	W10116751		Screw
021	Y312964		Not Available	OUTLET DUCT - OUTER HALF
022	Y313347	312535		Washer, Vault Mounting Brk.
023	Y313561			Screw----NA
NI	NLA		Not Available	SCREW
025	Y313795			Guide For Lint Screen
026	Y313796			Lint Seal
NI	NLA		Not Available	COVER, THREAD
028	Y314110	33002917		Screw, No.10-16
029	314158			Washer, Baffle To Tumbler
030	314802		Not Available	TUMBLER W/OUT BAFFLES
031	314803	33001012		Baffle
NI	314804	33001004		Baffle, Tall
033	314820			Seal, Tumbler
034	410233	9703438		Ring-Retnr

the laundry company®
the laundry company®