Maytag LAT8700ABL 01 - BASE

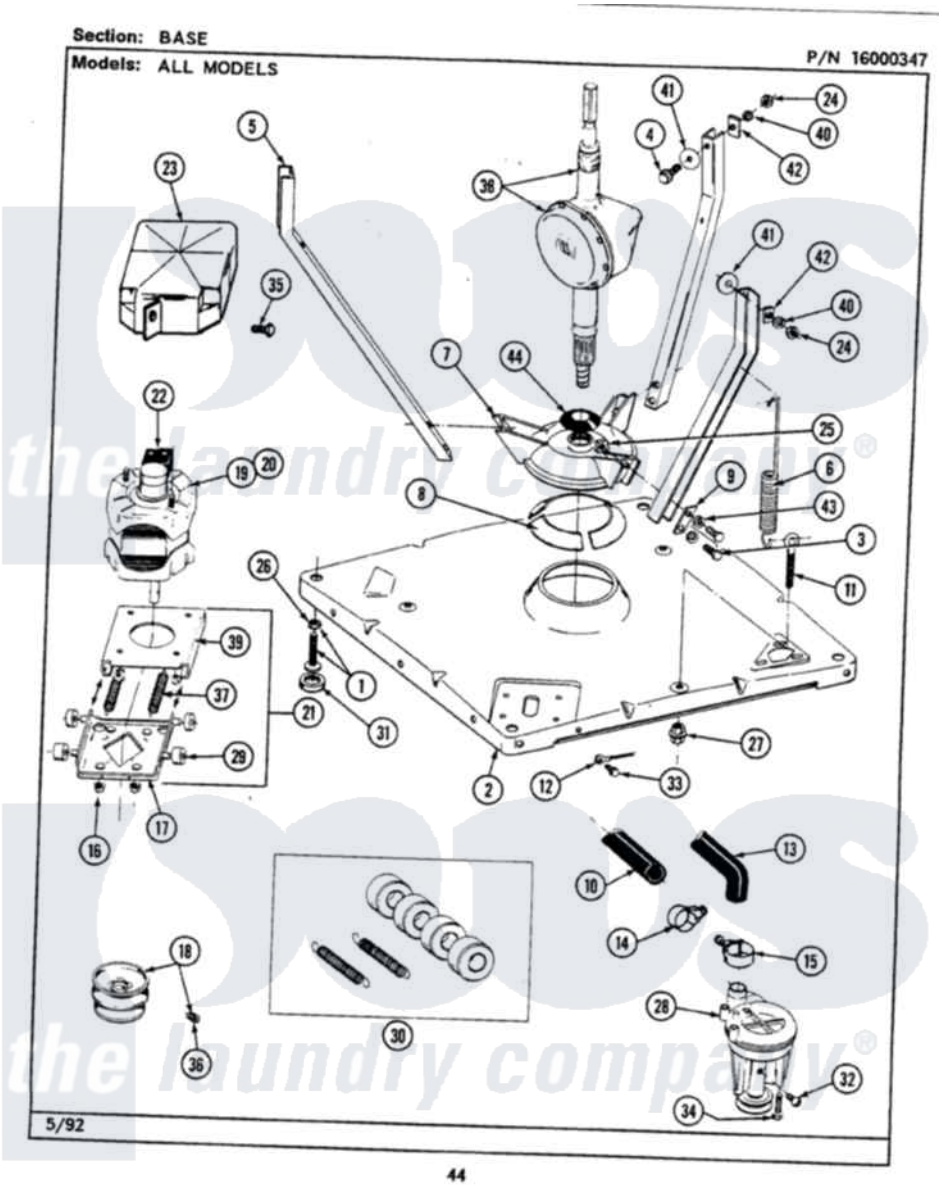

Maytag Residential Maytag LAT8700ABL Washer Parts Parts Diagram 01 - BASE
Click on the part number to view part

Item	Original Part Number	Replaced By	Status	Part Description
1	Y302699	22003428		Leg, Adjustable
2	203274			Base With Damper Pads
3	Y015627			Screw- Hex
4	205254	W10175938		Bolt
"	200744	W10175939		Bolt
5	213053			Brace, Tub Part Not Used
6	213054			Centering Spring - 3 Used
7	203725			Damper W/Bolt And Clip
8	203956			Damper Pad Kit
9	213073			Washer, Double Brace
10	214767	22001448		Hose, Pump
11	213120	216416		Bolt, Eye/Centering Spring
12	204807			Ground Wire, Supp. Plte To Top Cover
13	213045			Hose, Outer Tub Part Not Used
14	200461	285655		Clamp, Hose

15	202574	3367052		Clamp, Hose
16	311246		Not Available	KEPS NUT-MOTOR BASE
17	205908			Motor Mount Assembly
18	200816	6-2008160		Pulley- MO
20	201807	12002353		Motor-Drve
21	205999			Motor Mount Assembly
22	206505		Not Available	PROD. No.201664-15, & No.205463-3.
"	206504			Motor External Start Switch
"	205134		Not Available	MOTOR EXTERNAL START SWITCH
"	205133		Not Available	(PROD. IDNo. 2-1664-8 & 2-5463)
"	205132		Not Available	SWITCH, MOTOR EXTERNAL START No.201664-14,205463-4 & 201800-4
"	205131			Switch, Motor External Start
23	215098			Shield, Motor
24	Y052734			Nut, Carrage Bolts And Bracket
25	Y052785			Nut, Brace To Damper
26	210385			Lock Nut For Adjustable Leg
27	211949			Nut, Adjustment Eyebolt
28	202203	6-2022030		Pump As Pa
29	204998	205000		Roller And Spring Kit 4+Spr
30	205000			Roller And Spring Kit 4+Spr
31	210684			Foot, Adjustable Leg
32	Y015408	22003235		Screw, Bearing Insert
33	210186	3370225		Screw
34	211880			Screw, HeX Head No.10 X 1/2 Inc
35	213121	3400111		Screw, 12-14 X 5/8
36	Y053241			Set Screw, Motor Pulley
37	202718			Springs, Tension
38	206707	6-2097750		Trans Dee
39	214956			Motor Mount Assembly
40	Y054867			Washer, Lock
41	211100			Washer, Outer Tub
42	212979		Not Available	WASHER, TUB BRACE
43	911852	486009		Lockwasher
44	211028	22001586		Deflector, Water

the laundry company®