Maytag LAT8840BAL 05 - TOP

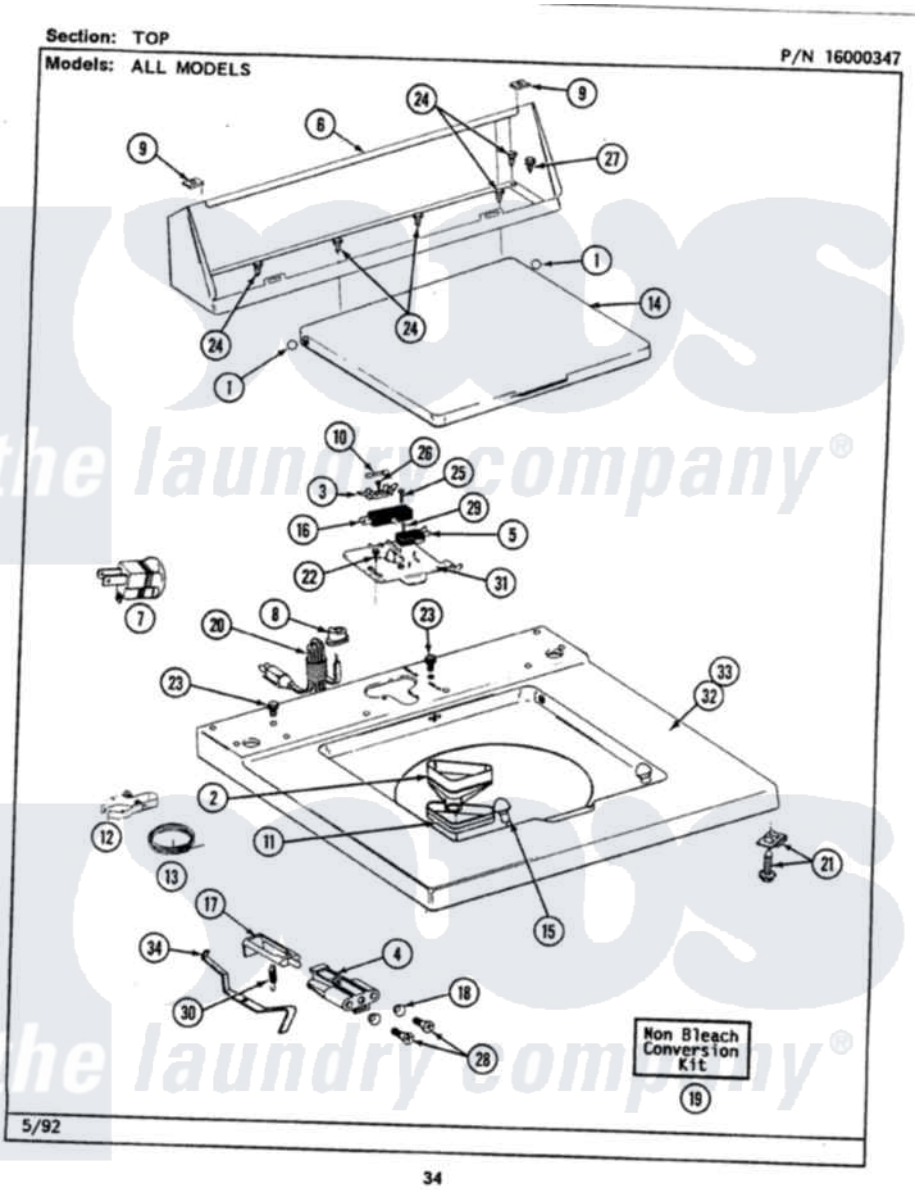

Maytag Residential Maytag LAT8840BAL Washer Parts Parts Diagram 05 - TOP
Click on the part number to view part

Item	Original Part Number	Replaced By	Status	Part Description
1	211726			Hinge, Ball Lid
2	215578			Bleach Inlet Almond
3	207167			Block, Fuse
4	214279	204968		Plunger And Bracket Assembly--W
5	207166			Switch, Check
6	205635L		Not Available	CONSOLE (ALM)
7	Y201808			Converter
8	211881			Grommet, Cord Part Not Used-Gas Models Only
9	215075			Fastener, Control Panel To Console
10	207168	22001682		Switch Assembly, Lid W/4amp Fuse
11	214436			Gasket
12	301548			Clamp, Ground Wire
13	311155			Ground Wire And Clamp
14	216073L		Not Available	(ALMOND)----NA

15	212716			Bumper, Lid
16	205415	279347		Switch-Lid
17	215700		Not Available	LID SWITCH PLUNGER
18	211500			Washer, Bracket To Top Cover
19	205997			Non-Bleach Conversion Kit
20	204590			Cord, Power
21	204445			Screw And Fastener Assembly
22	207159	489355		Screw, 8 X 1/2
23	210186	3370225		Screw
24	211294	90767		Screw, 8A X 3/8 HeX Washer Head Tapping
25	213501			Screw, No.6-20 X 1-1/8 Inch
26	215705	Y311711		Screw, Fuse Block
27	Y313559			Screw
28	910182	25-7809		Screw, No.6-20 1/2 Flthd Torx
29	912012	3400409		Screw
30	213720			Spring, Lid Switch
31	Y215699	22001678		Bracket, Switch And Fuse
32	207170L			Top Cover Assembly ALM----NA
34	215704			Lever, Unbalance

the laundry company®
the laundry company®