Maytag LAT9634ABE 01 - BASE

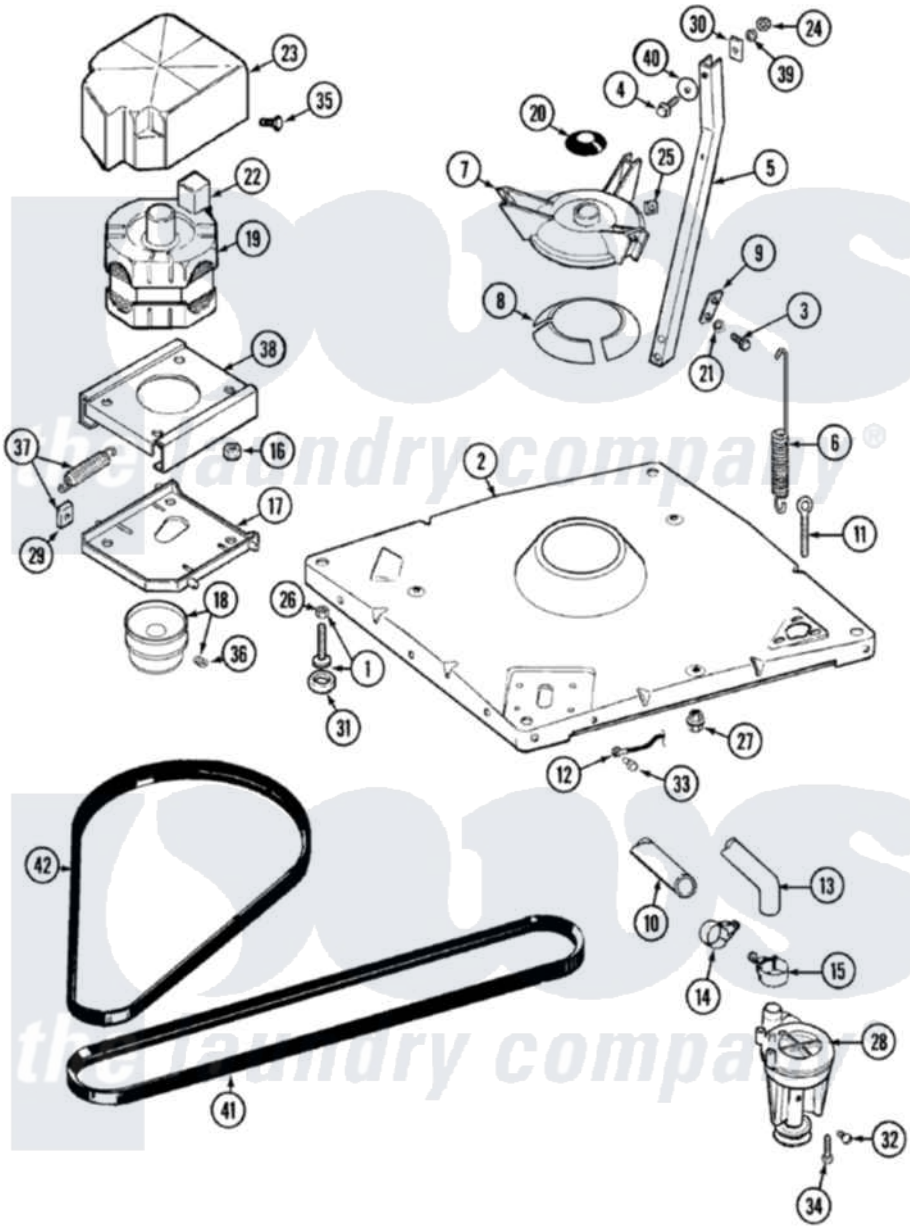

Maytag Residential Maytag LAT9634ABE Washer Parts Parts Diagram 01 - BASE
Click on the part number to view part

Item	Original Part Number	Replaced By	Status	Part Description
1	Y302699	22003428		Leg, Adjustable
2	22001172	22002150		Base
3	Y015627			Screw- Hex
4	205254	W10175938		Bolt
"	200744	W10175939		Bolt
5	213053			Brace, Tub Part Not Used
6	22001300			Spring, Centering
7	203725			Damper W/Bolt And Clip
8	203956			Damper Pad Kit
9	213073			Washer, Double Brace
10	214767	22001448		Hose, Pump
11	216416			Bolt, Eye/Centering Spring
12	901220			Ground Wire
13	213045			Hose, Outer Tub Part Not Used
14	202574	3367052		Clamp, Hose
15	202574	3367052		Clamp, Hose

16	Y311426	3400029		Nut, Adapter Plate
17	22001301			Mount, Motor Lower-Assembly
18	200816	6-2008160		Pulley- MO
19	201807	12002353		Motor-Drve
20	211028	22001586		Deflector, Water
21	911852	486009		Lockwasher
22	206504			Motor External Start Switch
"	205131			Switch, Motor External Start
23	215098			Shield, Motor
24	Y052734			Nut, Carrage Bolts And Bracket
25	Y052785			Nut, Brace To Damper
26	210385			Lock Nut For Adjustable Leg
27	211949			Nut, Adjustment Eyebolt
28	202203	6-2022030		Pump As Pa
29	204998	205000		Roller And Spring Kit 4+Spr
30	212979		Not Available	WASHER, TUB BRACE
31	210684			Foot, Adjustable Leg
32	Y015408	22003235		Screw, Bearing Insert
33	912365	3370225		Screw
34	211880			Screw, HeX Head No.10 X 1/2 Inc
35	213121	3400111		Screw, 12-14 X 5/8
36	Y053241			Set Screw, Motor Pulley
37	205000			Roller And Spring Kit 4+Spr
38	206707	6-2097750		Trans Dee
39	214956			Motor Mount Assembly
40	Y054867			Washer, Lock
41	211100			Washer, Outer Tub

the laundry company®