Maytag LDE412 06 - MOTOR DRIVE

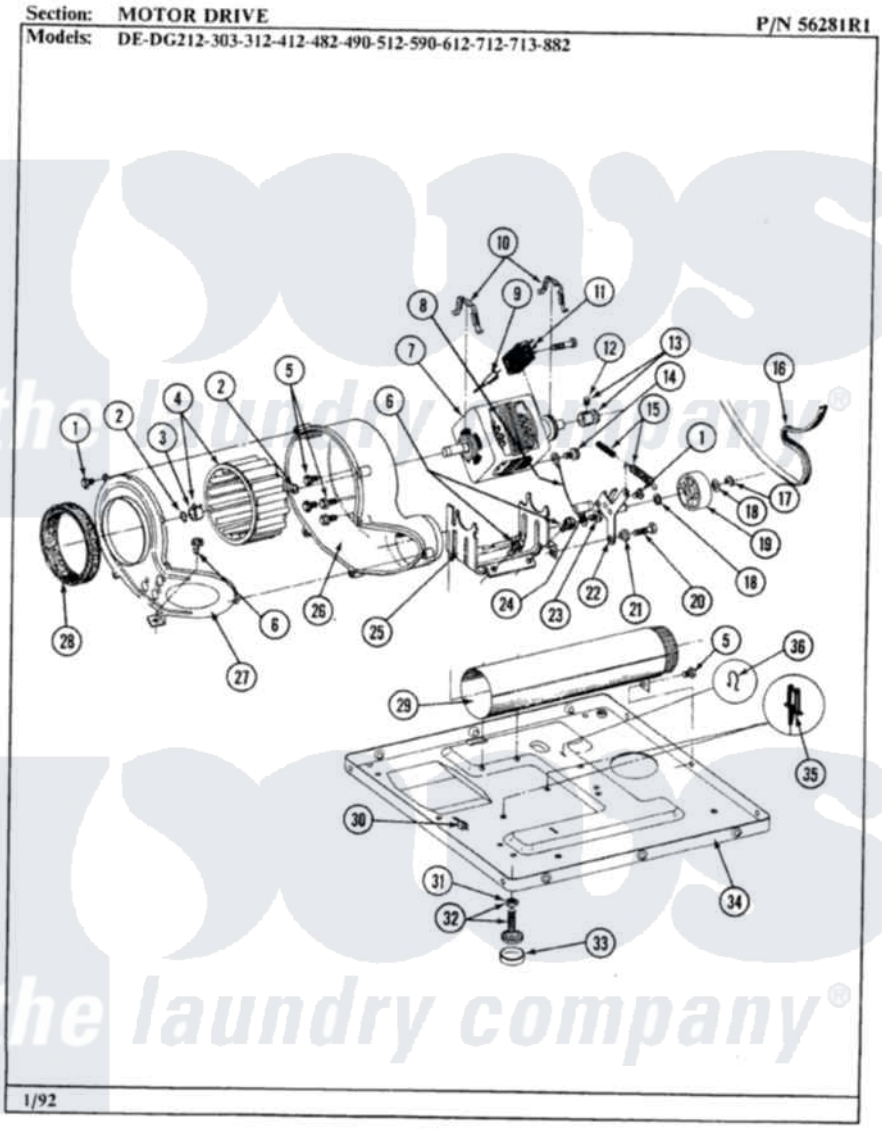

Maytag Residential Maytag LDE412 Dryer Parts Parts Diagram 06 - MOTOR DRIVE
Click on the part number to view part

Item	Original Part Number	Replaced By	Status	Part Description
1	Y312961	W10116751		Screw
2	410233	9703438		Ring-Retnr
3	312967			Clamp, Blower Housing
4	Y303836			Blower Wheel Assembly And Clamp
5	Y310632	1163839		Screw
6	Y313561			Screw----NA
7	Y303358	W10410999		Motor-Drve
8	901220			Ground Wire
9	306448		Not Available	WIRE
10	Y015825			Clip, Motor To Motor Support
11	Y303877		Not Available	SWITCH, MOTOR EXTERNAL START No.303358-2, No.303358-4, 303358-7
"	Y303879			Switch, Motor External Start
"	306207		Not Available	(PROD. No.303358-8 & No.303358-9)
12	Y053241			Set Screw, Motor Pulley

13	Y305185	6-3051850		Pulley- MO
14	910343	488234		Screw 8-32 X 1/4
15	Y303945			IDLER SPRING ASSY. W/PLUG
16	Y312959			Poly "V" Belt For Tumbler
17	312958	354987		Ring, Retaining
18	Y312527			Washer, Idler Shaft
19	Y303705	6-3037050		Pulley- ID
20	Y014874			Screw, Idler Arm And Sleeve
21	Y312894	315772		Sleeve, Idler Arm
22	Y303363	6-3033630		Idler Arm
23	211294	90767		Screw, 8A X 3/8 HeX Washer Head Tapping
24	Y313582	W10116756		Spacer
25	312897		Not Available	SUPPORT, MOTOR
26	Y312893			Housing, Blower
27	314846			Cover, Blower Housing
"	Y312895		Not Available	COVER FOR BLOWER----NA
28	Y312901			Seal, Housing Cover
29	Y303442			EXHAUST DUCT ASSEMBLY
30	Y310376			Clip, Door Switch Harness
31	Y052740	62739		Nut, Lock
32	Y305086			Adjustable Leg And Nut
33	Y314137			Foot, Rubber
34	Y303361		Not Available	BASE ASSY. (UPPER & LOWER)
35	Y313262	W10116752		Retainer-
36	410490			Spring, Retainer Wire Harness

the laundry company®