Maytag LDE7500 04 - INLET DUCT & HEATER ASSEMBLY

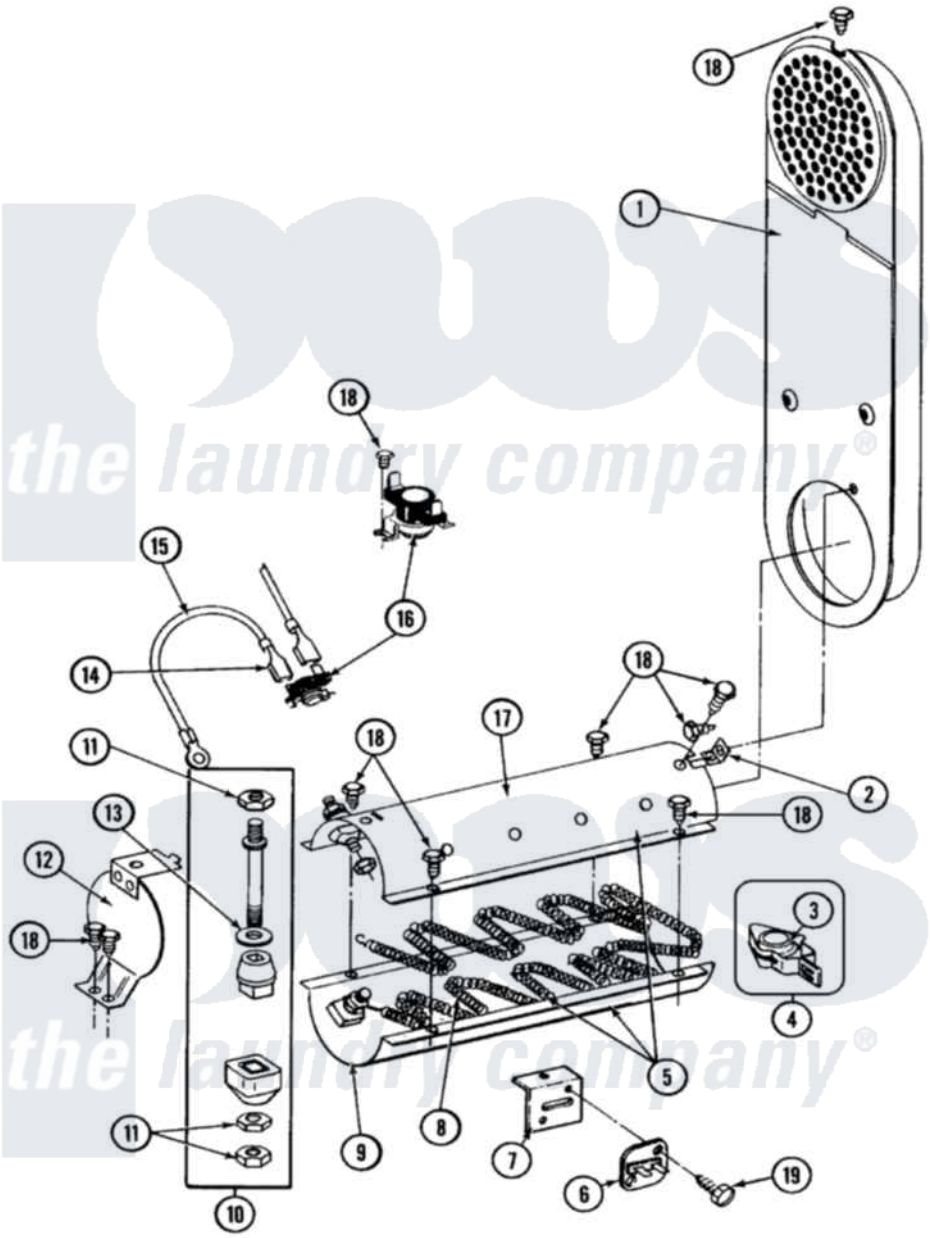

Maytag Residential Maytag LDE7500 Dryer Parts Parts Diagram 04 - INLET DUCT & HEATER ASSEMBLY
Click on the part number to view part

Item	Original Part Number	Replaced By	Status	Part Description
1	307120		Not Available	INLET DUCT ASSY.
2	Y312890			Retainer, Heater Chamber
3	Y313270			Insulator For Heater Elemen
4	Y303881			Clip And Insulator Assembly
5	Y303778			Heater Assembly Complete
6	307473			Fuse, Thermal
7	315046			MOUNTING BRACKET
8	Y313538			Heater Element 240 Volt
9	Y313576			Heater Chamber, Bottom
10	Y304596			Terminal Insulator Assembly
11	311484	112432		Nut
12	304124		Not Available	HEATER SHIELD
13	311093			Washer, Terminal Connection
14	210745			Wire Terminal
15	Y304693			Jumper Wire
16	303896			Hi-Limit Thermostat-Canada

"	303396			Thermostat, Hi-Limit
17	Y313575		Not Available	HEATER CHAMBER, TOP
18	211294	90767		Screw, 8A X 3/8 HeX Washer Head Tapping
19	314848	W10116760		Screw

the laundry company®
the laundry company®
the laundry company®