Maytag LSE7800ACL 05 - CABINET-DRYER (LSE7800ADW,ADL,ACW,ACL)

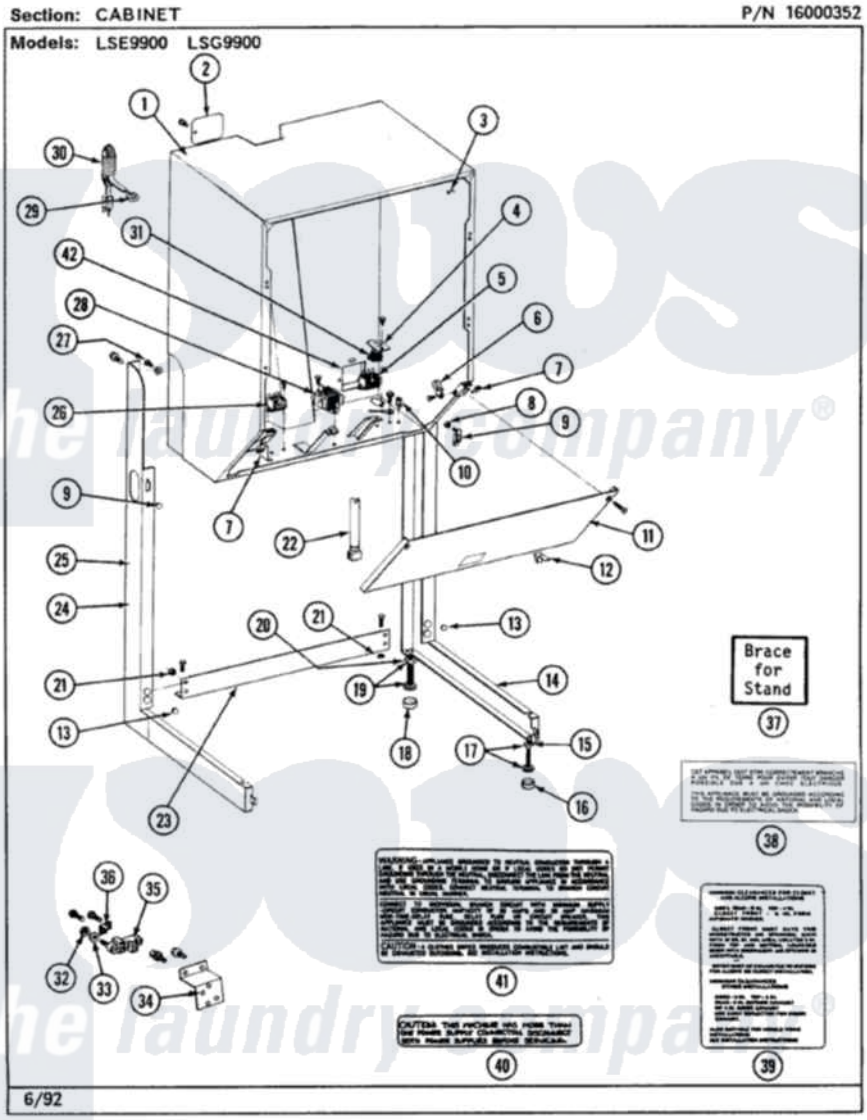

6

Maytag Residential Maytag LSE7800ACL Stacked Washer and Dryer Parts Parts Diagram 05 - CABINET-DRYER (LSE7800ADW,ADL,ACW,ACL)
Click on the part number to view part

Item	Original Part Number	Replaced By	Status	Part Description
3	Y313561			Screw----NA
4	314470		Not Available	COVER, TERMINAL
5	308055L		Not Available	CABINET (ALM)
6	312548			Fastener-Access Panel To CA
7	215954			Screw
8	400008			Block, Terminal
9	211168	W10139210		Screw, 8-18 X 5/16
10	314532		Not Available	MOUNTING BRACKET
11	215948		Not Available	GROMMET
12	315264	74006784		Clip, Harness
13	215075			Fastener, Control Panel To Console
14	Y310632	1163839		Screw
15	314489			Guide, Pin
16	214872			Palnut, End Cap Note: Nut, Lamp Holder

17	Y313262	W10116752		Retainer-
18	211252			Screw, Ground Wire
19	207784		Not Available	WIRE HARNESS
"	208213			Wire Harness
20	314477			Screw, Access Panel
21	306072L		Not Available	ACCESS PANEL-ALMOND----NA
22	314482			Fastener, Spring
23	314498			Pad, Dryer Leg
24	306073L		Not Available	LEG ASSM,RIGHT-ALMOND
25	Y052740	62739		Nut, Lock
26	Y314137			Foot, Rubber
27	Y305086			Adjustable Leg And Nut
28	210684			Foot, Adjustable Leg
29	Y302699	22003428		Leg, Adjustable
30	Y052721			Nut, Terminal Block Plate
31	210385			Lock Nut For Adjustable Leg
32	314499		Not Available	BRACE
33	214354			Screw, Top Cover To Cabnt.
34	306110L	33002516		Stand, Dryer
35	306074L		Not Available	LEG ASSM, LEFT-ALMOND
36	303846	22003781		Screw, Ground Strap
37	314663	214354		Screw, Top Cover To Cabnt.
38	305205	694419		Mini-Buzzer
39	211168	W10139210		Screw, 8-18 X 5/16
41	314505		Not Available	INSTRUCTION LABEL
42	214519			LABEL, ELECTRICAL INSTR. PART NOT USED-GAS MODELS ONLY
43	314486		Not Available	LABEL
44	306128		Not Available	BRACE FOR STAND-ACCESSORY
45	215960		Not Available	STRAIN RELIEF
46	215953		Not Available	SCREW

the laundry company®