Maytag LSE7804ADL 14 - TUB

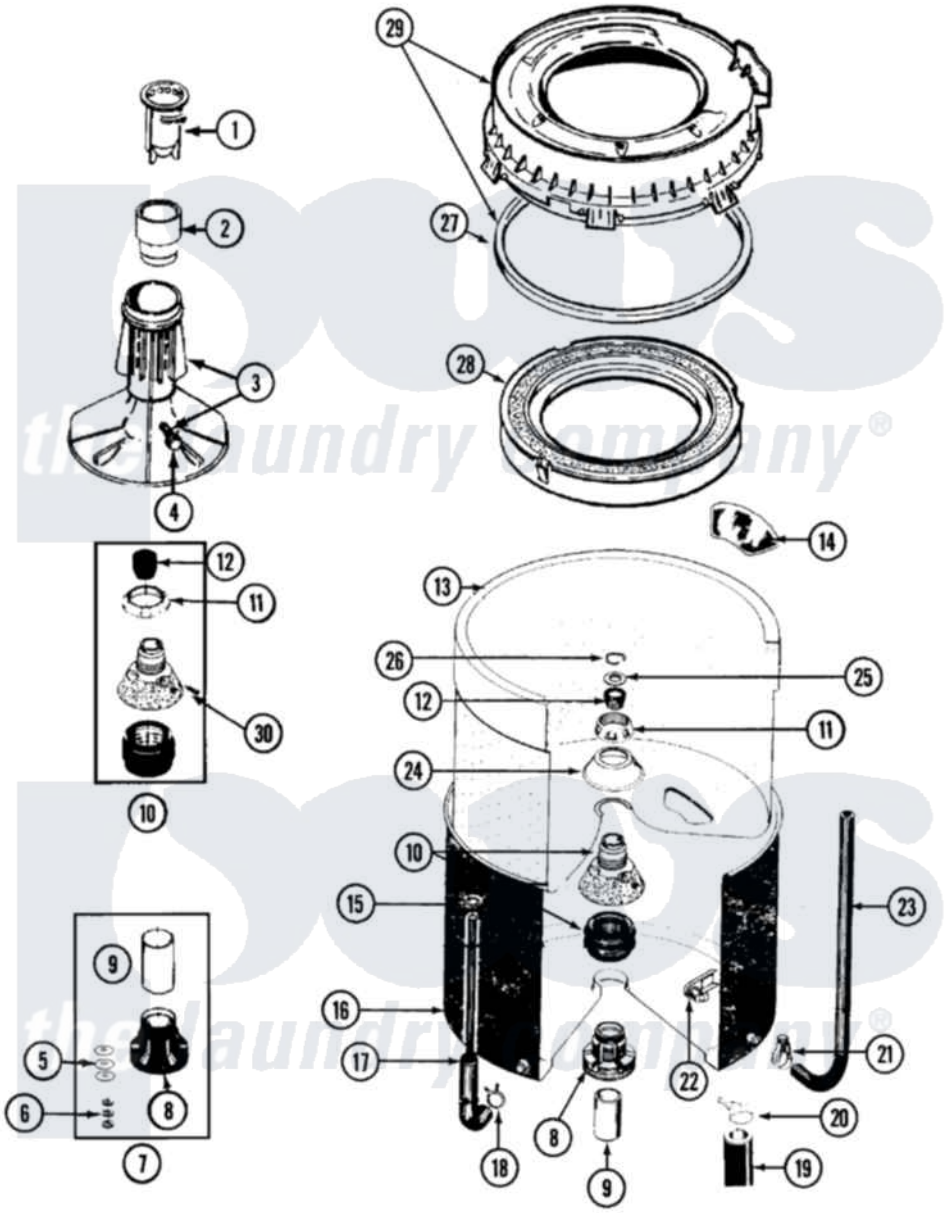

Maytag Residential Maytag LSE7804ADL Stacked Washer and Dryer Parts Parts Diagram 14 - TUB
Click on the part number to view part

Item	Original Part Number	Replaced By	Status	Part Description
1	22001294			Cup, Dispensing
2	22001295			Housing, Dispenser
3	207538			Agitator W/Lock Screw
4	206478		Not Available	SCREW & WASHER FOR AGITATOR
5	211100			Washer, Outer Tub
6	Y054867			Washer, Lock
7	204013	6-2040130		Tub Bearin
8	200824	6-2040130		Tub Bearin
9	211130			Bearing Liner, Tub Bearing
10	204012	6-2095720		Mounting S
11	211047	6-2110472		Nut- Clamp
12	Y0A4298	6-0A57420		Seal- Agitator
13	22001140	Y2201881		Tub, Inner Short White SP
14	207219			Filter, Self-Cleaning
15	410296	596669		Clamp, Manifold
16	22001116		Not Available	TUB, OUTER (STACK)

17	22001073	22001616	Tube, Air
18	211641		Clamp, 1-1/16"
19	213045		Hose, Outer Tub Part Not Used
20	201011	285655	Clamp, Hose
21	205161	489503	Clamp
22	214434		Spout, Deflector
23	214495		Tube, Inlet To Tub
24	211210		Washer, Clamping Nut
25	Y015666		Washer, Retaining -
26	Y015667		Retaining Ring
27	22001007		Gasket, Cover To Tub
28	22001142		Ring, Balance
29	22001299		Tub Cover And Gasket Assembly
30	211618	22001423	Set Screw, Mounting Stem

the laundry company®
the laundry company®