Maytag LSE9904ADE 12 - TOP & LID (LSE9904ACM)

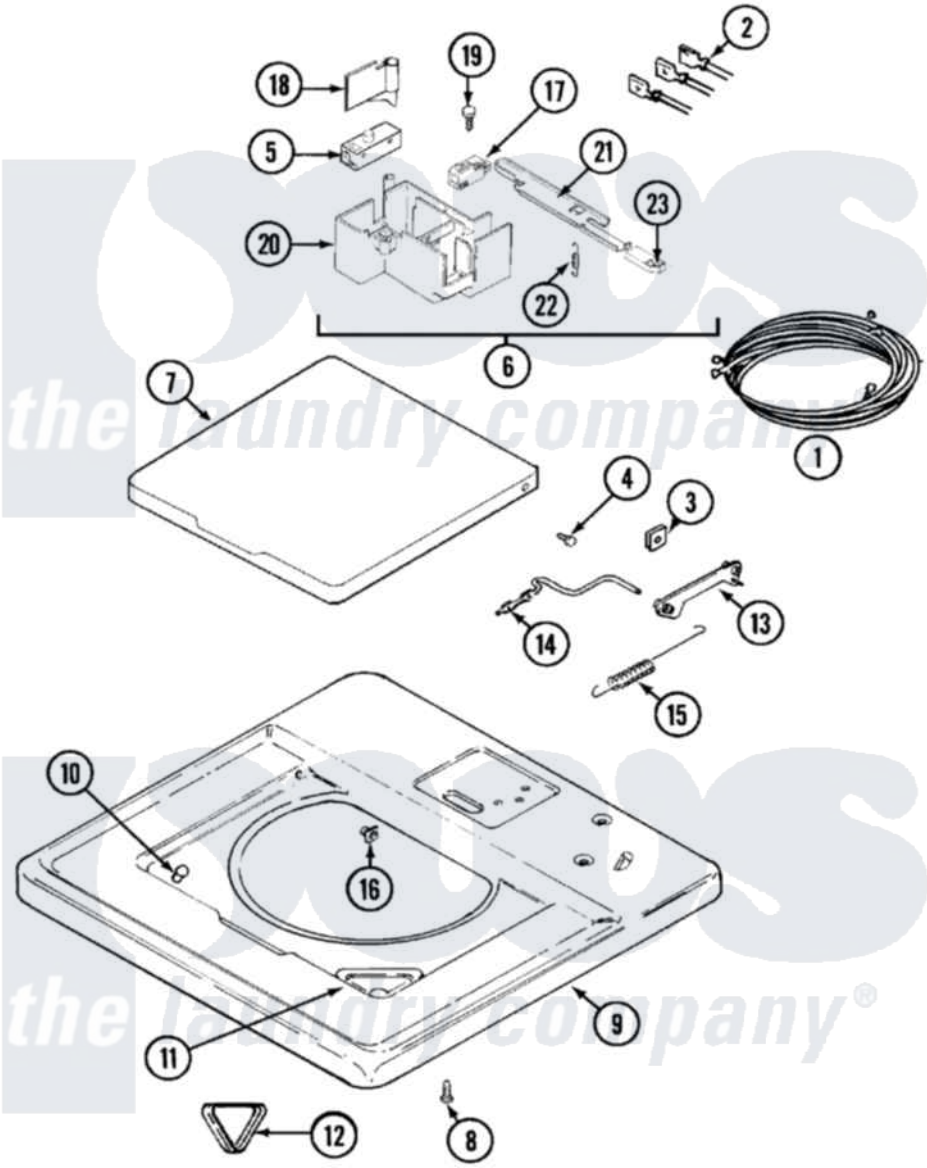

Maytag Residential Maytag LSE9904ADE Stacked Washer and Dryer Parts Parts Diagram 12 - TOP & LID (LSE9904ACM)
Click on the part number to view part

Item	Original Part Number	Replaced By	Status	Part Description
1	22001430		Not Available	WIRE HARNESS, MAIN
2	208782		Not Available	WIRE HARNESS, LID SWITCH
3	22001194			Clip, Spring
4	22001001			Screw
5	208824			Pc Switch, Lid
6	22001284			Switch Assembly, Lid
"	22001580			Switch Assembly, Lid
8	214354			Screw, Top Cover To Cabnt.
10	212716			Bumper, Lid
12	215374		Not Available	GASKET FOR BLEACH CUP
13	22001189			Rod, Restraint
14	22001208			Rod, Counter Balance
15	Y216184			Spring, Counter Balance
16	22001193			Bearing, Counter Balance
17	208825			Switch, Pc

18	22001283	Trigger
19	215537	Screw
"	22001183	Screw
20	22001285	Holder, Switch
21	22001286	Switch, Arm
22	22001287	Spring, Switch
23	22001250	Glide, Switch Arm

the laundry company®
the laundry company®
the laundry company®