Maytag LSG7806AAM 12 - TOP & LID

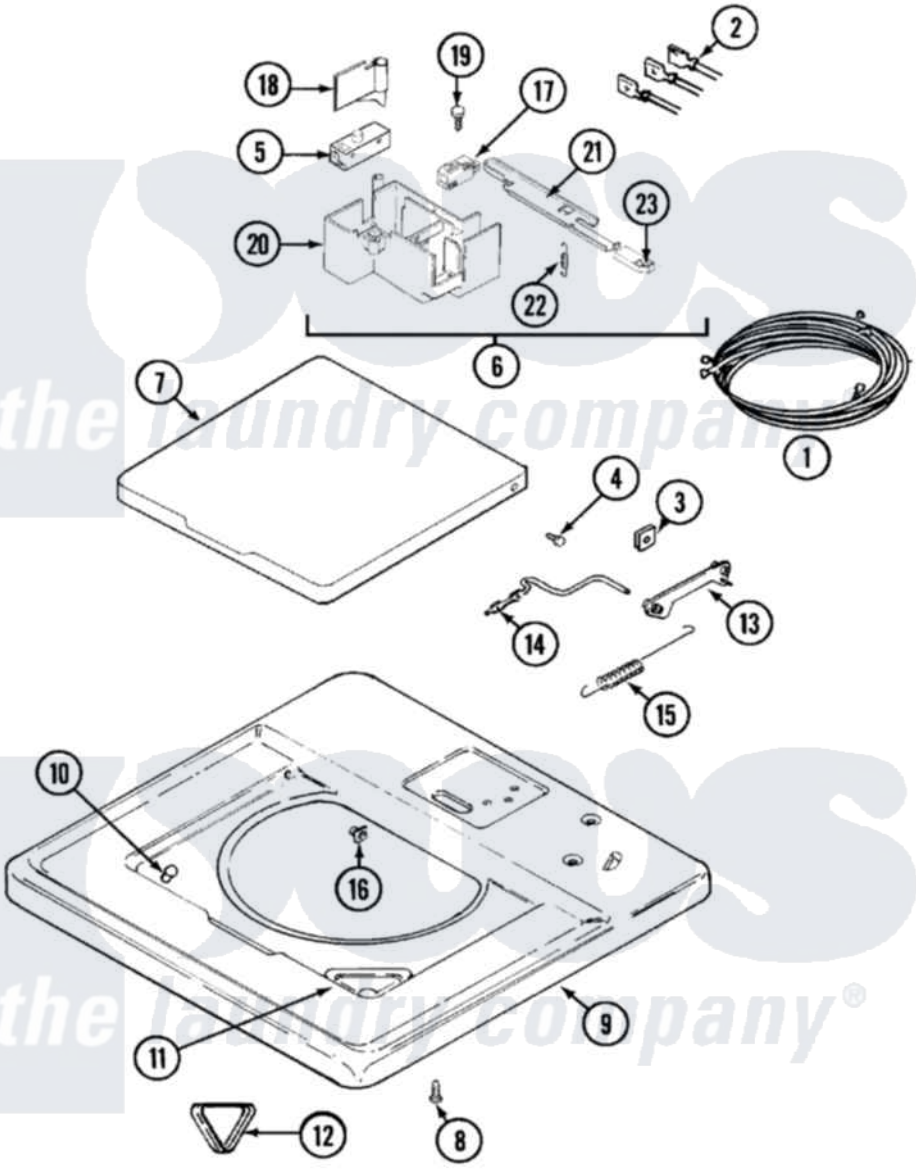

Maytag Residential Maytag LSG7806AAM Stacked Washer and Dryer Parts Parts Diagram 12 - TOP & LID
Click on the part number to view part

Item	Original Part Number	Replaced By	Status	Part Description
1	22001585			Harness, Wire
"	22001940		Not Available	HARNESS, WASHER (UPPER)
2	22001939			Harness, Lid Switch
3	22001194			Clip, Spring
4	22001001			Screw
5	208823			Pc Switch, Lid
6	22001581	12001514		Switch-Lid
7	22001081		Not Available	LID (ALM)----NA
8	214354			Screw, Top Cover To Cabnt.
9	22001063	22002646		Cover, Top
10	212716			Bumper, Lid
11	22001008			Cup, Bleach
12	215374		Not Available	GASKET FOR BLEACH CUP
13	22001189			Rod, Restraint
14	22001208			Rod, Counter Balance
15	Y216184			Spring, Counter Balance

16	22001193	Bearing, Counter Balance
17	207166	Switch, Check
18	22001283	Trigger
19	215537	Screw
"	22001183	Screw
20	22001285	Holder, Switch
21	22001286	Switch, Arm
22	22001287	Spring, Switch
23	22001250	Glide, Switch Arm

the laundry company®
the laundry company®
the laundry company®