Maytag LSG9900AAE 04 - BASE & PUMP (LSE9900AEL,AEW)

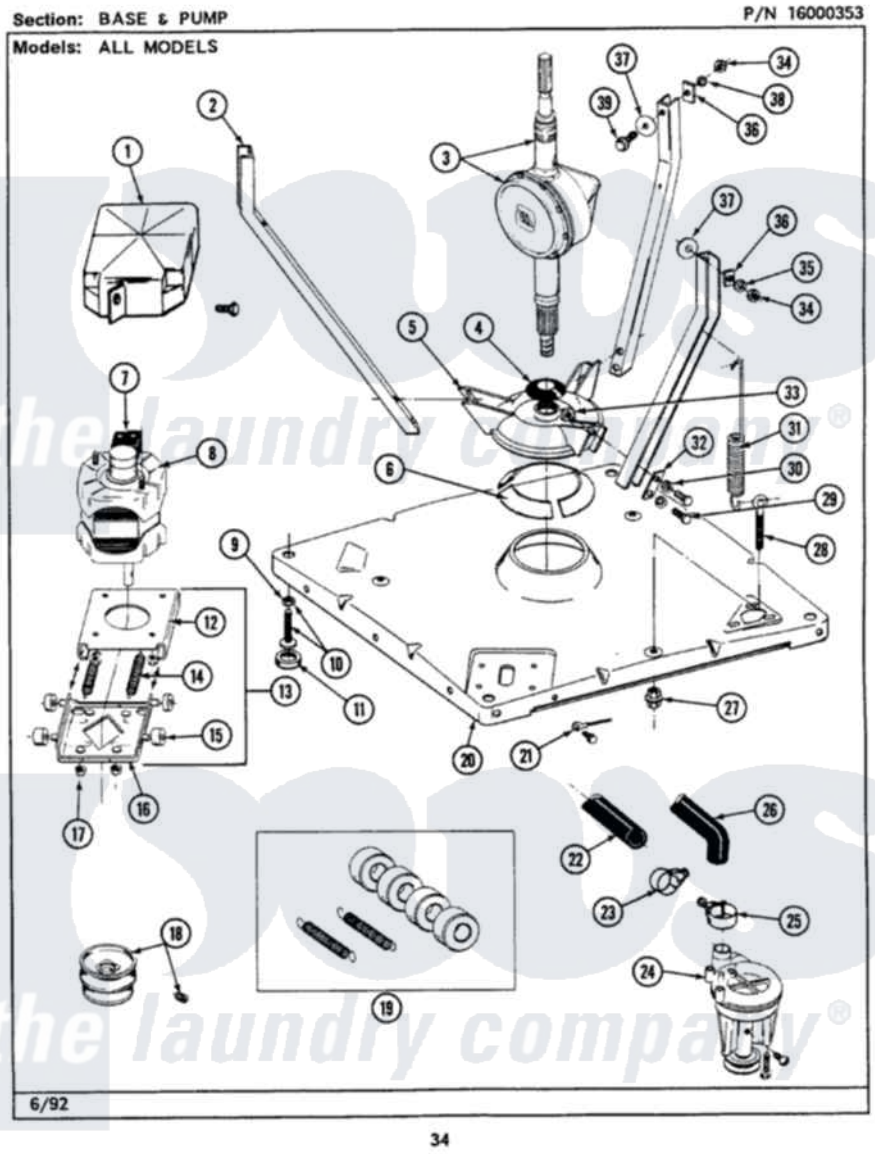

Maytag Residential Maytag LSG9900AAE Stacked Washer and Dryer Parts Parts Diagram 04 - BASE & PUMP (LSE9900AEL,AEW)
Click on the part number to view part

Item	Original Part Number	Replaced By	Status	Part Description
1	215098			Shield, Motor
2	213100		Not Available	PART NOT USED
3	206707	6-2097750		Trans Dee
4	211028	22001586		Deflector, Water
5	203725			Damper W/Bolt And Clip
6	203956			Damper Pad Kit
7	206505		Not Available	PROD. No.201664-15, & No.205463-3.
"	205133		Not Available	(PROD. IDNo. 2-1664-8 & 2-5463)
"	205132		Not Available	SWITCH, MOTOR EXTERNAL START No.201664-14,205463-4 & 201800-4
8	201805	12002351		Motor-Drve
9	210385			Lock Nut For Adjustable Leg
10	Y302699	22003428		Leg, Adjustable
11	210684			Foot, Adjustable Leg

12	214956			Motor Mount Assembly
13	205999			Motor Mount Assembly
14	202718			Springs, Tension
15	204998	205000		Roller And Spring Kit 4+Spr
16	205908			Motor Mount Assembly
17	Y311426	3400029		Nut, Adapter Plate
18	Y053241			Set Screw, Motor Pulley
"	200816	6-2008160		Pulley- MO
19	205000			Roller And Spring Kit 4+Spr
20	203274			Base With Damper Pads
21	901220			Ground Wire
"	210186	3370225		Screw
22	215365	22001448		Hose, Pump
23	200461	285655		Clamp, Hose
24	211880			Screw, HeX Head No.10 X 1/2 Inc
"	202203	6-2022030		Pump As Pa
"	Y015408	22003235		Screw, Bearing Insert
25	202574	3367052		Clamp, Hose
26	213045			Hose, Outer Tub Part Not Used
27	211949			Nut, Adjustment Eyebolt
28	213120	216416		Bolt, Eye/Centering Spring
29	Y015627			Screw- Hex
30	911852	486009		Lockwasher
31	213054			Centering Spring - 3 Used
32	213073			Washer, Double Brace
33	Y052785			Nut, Brace To Damper
34	Y052734			Nut, Carrage Bolts And Bracket
35	Y054867			Washer, Lock
36	212979		Not Available	WASHER, TUB BRACE
37	211100			Washer, Outer Tub
38	Y054867			Washer, Lock
39	205254	W10175938		Bolt
"	200744	W10175939		Bolt

the laundry company®