Maytag LSG9900AAW 18 - TUMBLER (LSE9900ACL,ACW,ADL,ADW)

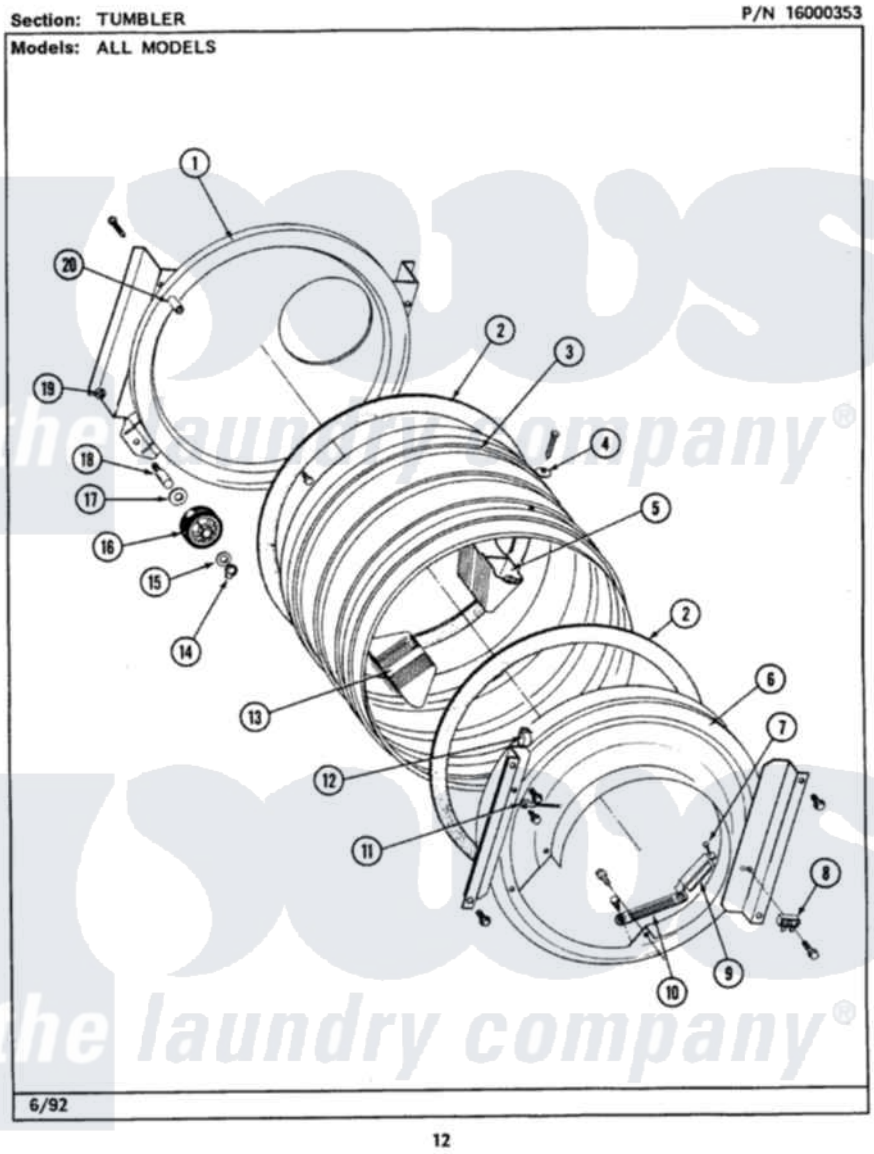

Maytag Residential Maytag LSG9900AAW Stacked Washer and Dryer Parts Parts Diagram 18 - TUMBLER (LSE9900ACL,ACW,ADL,ADW)
Click on the part number to view part

Item	Original Part Number	Replaced By	Status	Part Description
1	Y306660	33001106		Back, Tumbler
"	313764		Not Available	SCREW
2	314820			Seal, Tumbler
3	Y306664	33001177		Tumbler
"	314805	33001177		Tumbler
"	Y310759			Screw, Tumbler Baffles
4	314158			Washer, Baffle To Tumbler
5	Y310759			Screw, Tumbler Baffles
"	314807		Not Available	TUMBLER BAFFLE - TALL
6	Y310632	1163839		Screw
"	306710			Tumbler Front Assembly
"	Y313561			Screw----NA
"	Y314110	33002917		Screw, No.10-16
7	210720			Rivet, Bearing To Tumbler Frnt
8	306130			Spark Gap Assembly
"	314554		Not Available	SCREW

9	306508			Tumbler Bearing Kit ----W
10	304997			Sensor Assembly With Screws
"	Y251119	3177991		Screw
11	901220			Ground Wire
"	211294	90767		Screw, 8A X 3/8 HeX Washer Head Tapping
12	Y310376			Clip, Door Switch Harness
13	314806		Not Available	TUMBLER BAFFLE - SHORT
"	Y310759			Screw, Tumbler Baffles
14	410233	9703438		Ring-Retnr
15	312535			Washer, Vault Mounting Brk.
16	Y303373	12001541		Drum Roller/Washer Assembly--W
17	Y313347	312535		Washer, Vault Mounting Brk.
18	Y312948	6-3129480		Shaft- Tumbler
19	312538	33001443		Nut, Hex
20	313915	31-3915		Tech Sheet

the laundry company®

the laundry company®