Maytag MAF25PN3 07 - FRAME & TUB ASSEMBLY

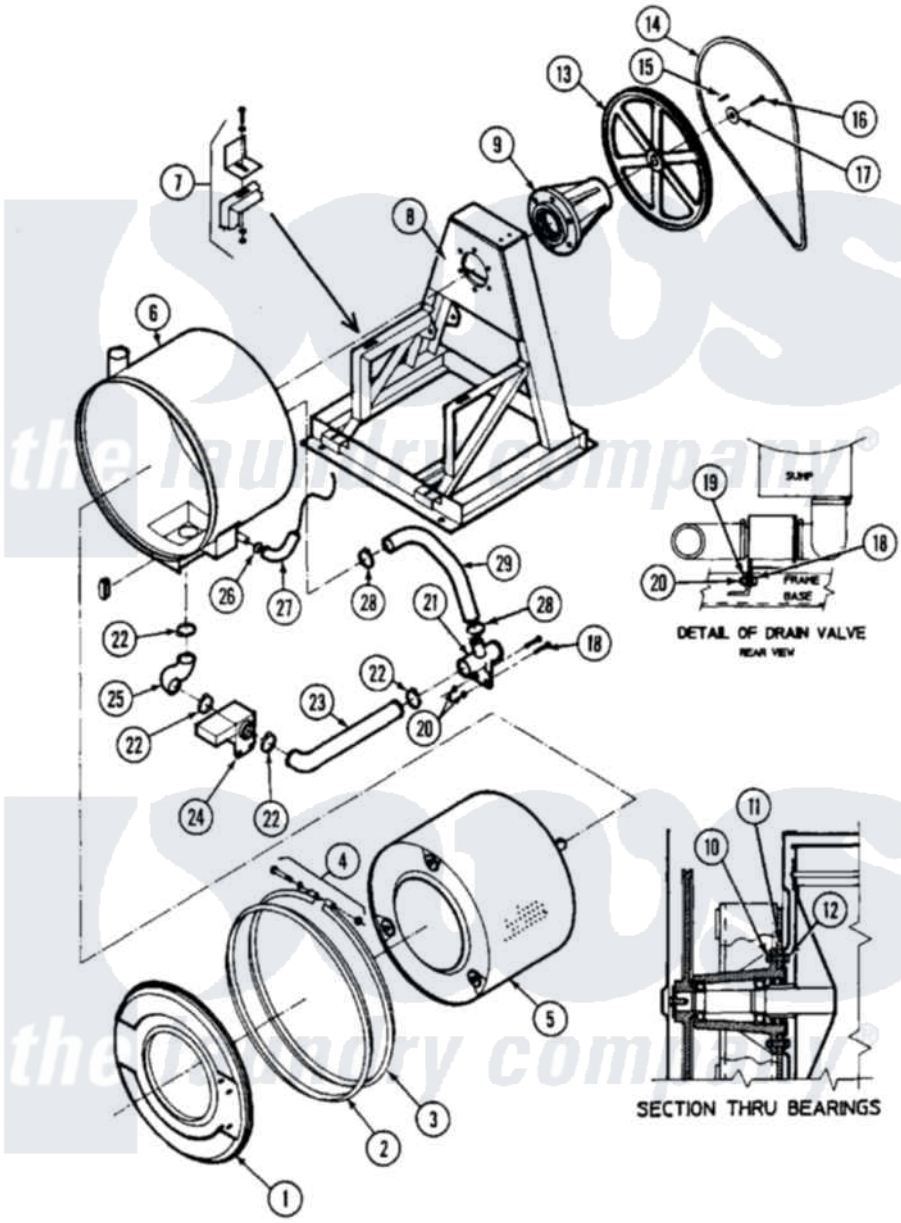

Maytag Residential Maytag MAF25PN3 Washer Parts Parts Diagram 07 - FRAME & TUB ASSEMBLY
Click on the part number to view part

Item	Original Part Number	Replaced By	Status	Part Description
001	24001652		Not Available	SHELL ASSY. (FRT)
002	24001653	24001184		Gasket Kit
003	24001654		Not Available	SHELL BAND ASSY.
004	24001304			Washer, Flat
"	24001305			Nut, Fiberlock
"	24001656			Bolt
005	24001267		Not Available	BASKET (25-2 SPEED)
006	NLA		Not Available	KIT, SHIELD RETRO
007	24001492			Fastener Kit, Shell Band
"	24001516			Washer, Flat Pltd.
"	24001657			Bolt
"	24001658			Washer
008	24001370		Not Available	KIT ASSY., FRAME (2 SPEED)
009	24001259			Kit, Trunnion
010	24001563			Nut, Fiberlock
011	24001496			Washer, Flat S.s.

012	24001659			Bolt
013	24001396			Kit, Pulley
014	24001093			Belt, V
015	24001499		Not Available	KEY (3/8`` X 1 1/4``)
016	Y24001500			Screw, S.s.
017	24001501			Washer, Stainless Steel
018	24001502	8204624		Bolt
019	24001304			Washer, Flat
020	24001305			Nut, Fiberlock
021	24001826		Not Available	(B)CONNECTION, TEE-DRAIN
022	24001353	696392		Hose Clamp
023	24001660			Hose, Drain
024	24001116			Valve, Drain
025	24001565			Hose, Drain
026	24001438	285655		Clamp, Hose
027	24001661		Not Available	HOSE, AIR DOME
028	24001283		Not Available	CLAMP, HOSE (No.28)
029	24001662			Hose, Overflow

the laundry company®
the laundry company®