# Maytag MAF35MC4VS 08 - CONTROL MODULE (MAF35MC4Vx)

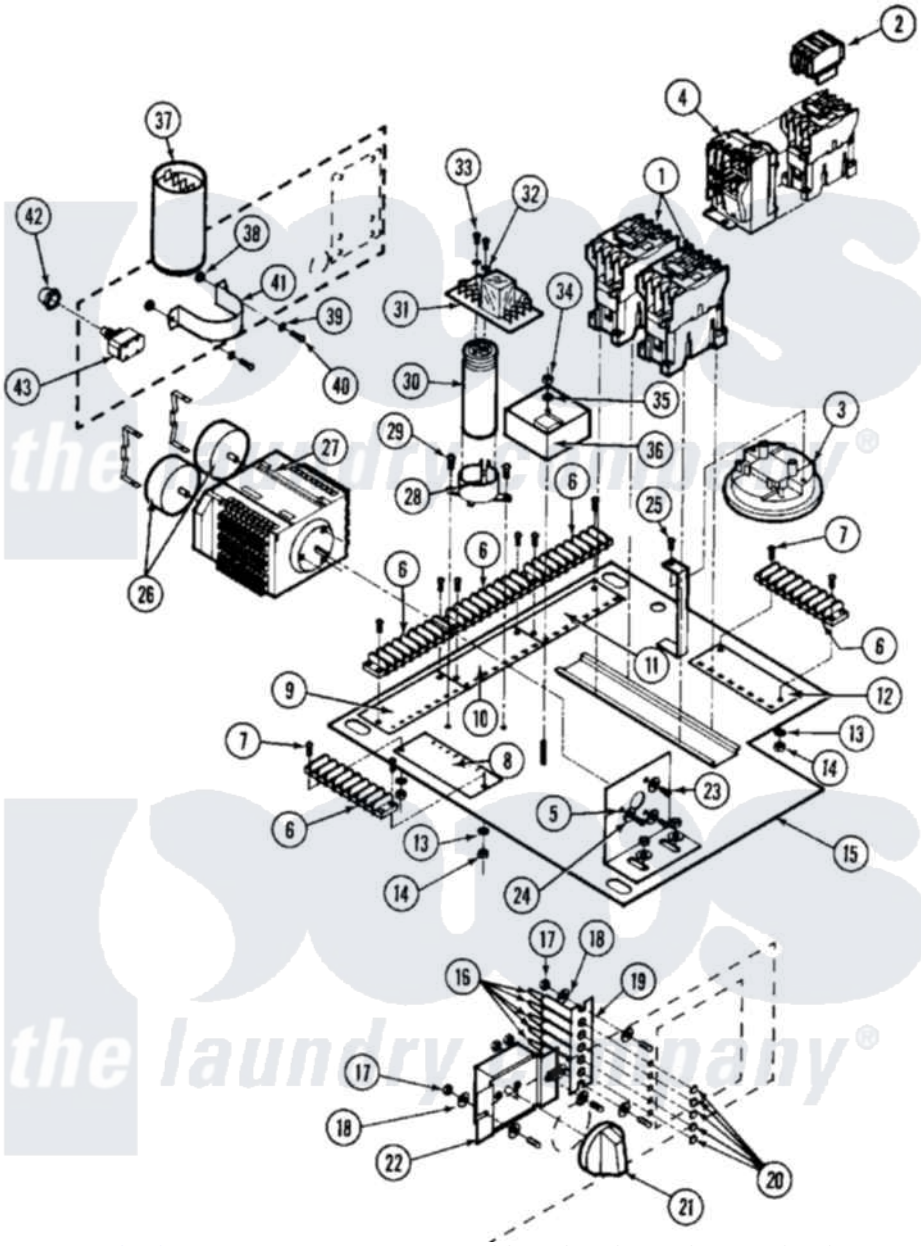

Maytag Residential Maytag MAF35MC4VS Washer Parts Parts Diagram 08 - CONTROL MODULE (MAF35MC4Vx)
Click on the part number to view part

| Item | Original Part Number | Replaced By | Status | Part Description |
|---|---|---|---|---|
| 001 | 24001105 | 24002051 | | Contactor- |
| 002 | 24001104 | | Not Available | CONTACTOR, AUX. ADDER |
| 003 | 24001223 | | Not Available | SWITCH, DUAL LEVEL |
| 004 | 24001233 | | | Protector, Overload |
| 005 | W10124350 | | Not Available | PART NUMBER NOT AVAILABLE |
| 006 | 24001412 | | Not Available | STRIP, TERMINAL |
| 007 | 24001414 | 4450038 | | Screw |
| 008 | NLA | | Not Available | DECAL,INSUL. TERM STRIP (1-8) |
| 009 | NLA | | Not Available | DECAL,INSUL.TERM STRIP (9-16) |
| 010 | NLA | | Not Available | DECAL,INSUL.TERM STRIP (17-24) |
| 011 | NLA | | Not Available | DECAL,INSUL.TERM STRIP (25-32) |
| 012 | 24001030 | | Not Available | DECAL,INSUL.TERM STIRP (33-40) |
| 013 | 24001415 | | | Washer, S.s. |

| | | | | |
|---|---|---|---|---|
| 014 | 24001417 | 7103P070-60 | | Nut, Top Pilot |
| 015 | W10124350 | | Not Available | PART NUMBER NOT AVAILABLE |
| 016 | 24001209 | | Not Available | LIGHT, NEON (1/3W, 125VAC) |
| 017 | 24001342 | 74005230 | | Nut, Lock |
| 018 | 24001576 | | | Washer, Flat |
| 019 | 24001214 | | | Bracket, Ind. Light |
| " | 24001841 | 24001214 | | Bracket, Ind. Light |
| 020 | 24001210 | 215564 | | Lens, Indicator Light |
| 021 | 24001204 | | Not Available | KNOB |
| 022 | 24001207 | | | Switch, Cycle Select |
| 023 | 24001357 | | | Screw, Stainless Steel |
| 024 | 24001358 | | | Washer, Flat |
| 025 | 24001411 | 313806 | | Screw |
| 026 | 24001577 | | | Motor, Timer |
| 027 | 24001178 | | | Kit, Timer Cycle |
| 028 | W10124350 | | Not Available | PART NUMBER NOT AVAILABLE |
| 029 | 24001578 | 3196170 | | Screw |
| 030 | 24001247 | | | Capacitor, Door Lock |
| 031 | 24001248 | | Not Available | PC BOARD, DOOR UNLOCK (110V) |
| 032 | 24001579 | | | Washer, S.s. |
| 033 | 24001580 | | | Screw, S.s. |
| 034 | 24001419 | W10139757 | | Nut |
| 035 | 24001295 | | | Lockwasher, S.s. |
| 036 | 24001176 | | | Kit, Timer Delay |
| 037 | 24001235 | | | Kit, Switch |
| 038 | 24001425 | | | Nut, Fiberlock, Pltd |
| 039 | 24001576 | | | Washer, Flat |
| 040 | 24001593 | 132780 | | Screw |
| 041 | 24001594 | | Not Available | BRACKET, SINPAC SWITCH |
| 042 | 24001744 | | Not Available | BOOT, PUSH BUTTON |
| 043 | 24001254 | | | Switch, Momentary |
| 044 | 24001245 | | | Fuse, Slo Blo |

the laundry company®