Maytag MAH20PDAWW 07 - SPINNER ASSEMBLY & OUTER TUB COVER

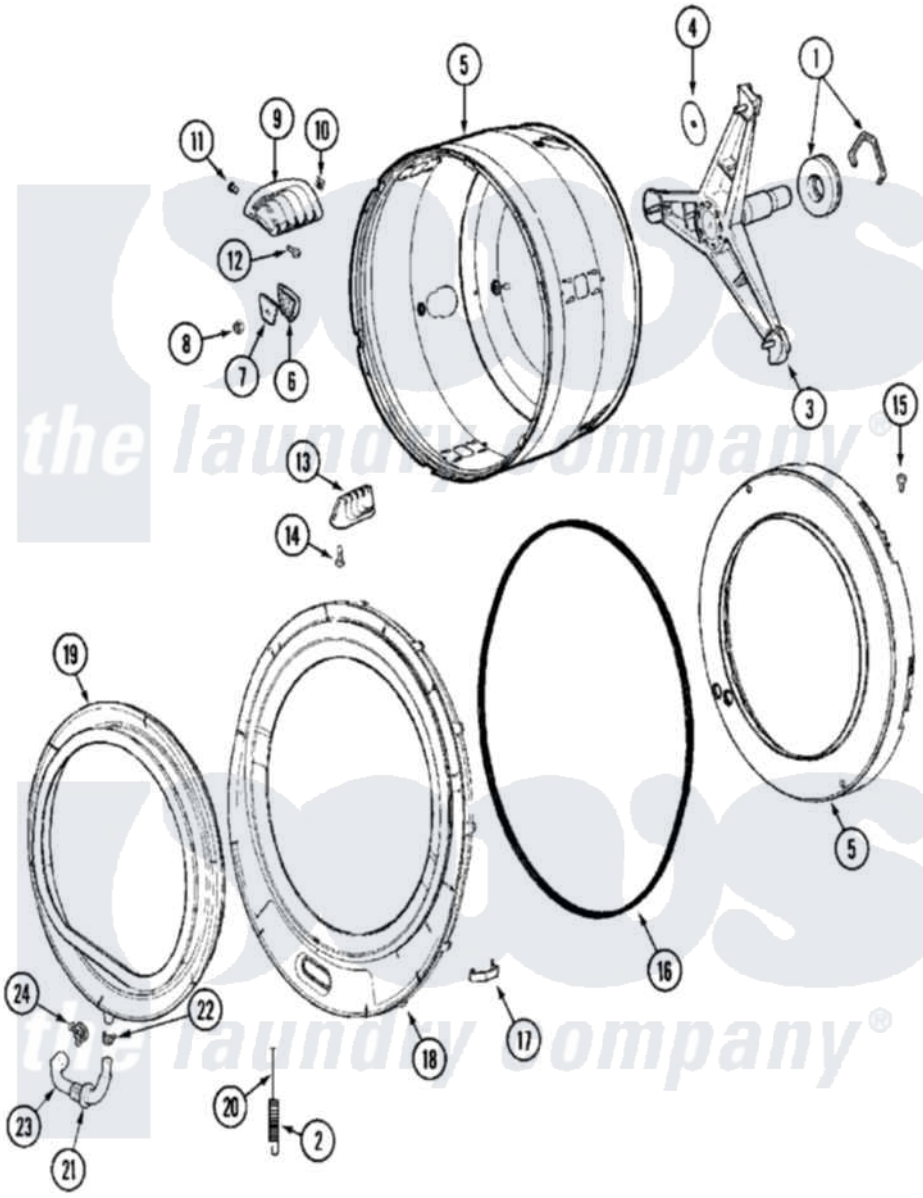

Maytag Residential Maytag MAH20PDAWW Washer Parts Parts Diagram 07 - SPINNER ASSEMBLY & OUTER TUB COVER

Click on the part number to view part

Item	Original Part Number	Replaced By	Status	Part Description
001	12001478	12002022		Lip Seal Kit
002	22002099			Spring, Tub
003	22002123			Tube, Molykote
"	22002897	W10181639		Support
004	22002023			Washer, Plastic
005	22002115	6-2717080		Spinner As
006	22002021	22002482		Washer, Profile
007	22002020			Washer, Spinner Support
008	22002122	2207454		Nut, Hex
009	22001985			Baffle, Drip
010	22002009			Grommet, Baffle
011	22001999			Grommet, Baffle
012	22002325	22003556		Screw, Baffle
013	22001986			Baffle, Drip
014	22002059			Screw, Baffle
				PART NEVER USED IN

015	22002028		Not Available	PART NEVER USED IN PRODUCTION
"	NLA		Not Available	SCREW, BALANCE RING
016	22002077			Seal, Tub Cover
017	22002050			Clip, Tub To Cover
018	22002238	22003212		Cover, Tub --W
"	22002961	22003212		Cover, Tub --W
"	22003074			Guard, Hose
"	22003212			Cover, Tub --W
019	12001772	12002533		Boot Kit
"	22001978	12002533		Boot Kit
020	22002105	22002327		Wire, Boot Clamp
021	22003074			Guard, Hose
022	Y22003072			CLAMP, HOSE DOUBLE WIRE
023	22003071	22004477		Drain Hose, Door Boot
024	22003073	596669		Clamp, Manifold

the laundry company®
the laundry company®