Maytag MAT10PDABW 08 - CLUTCH, BRAKE & BELTS

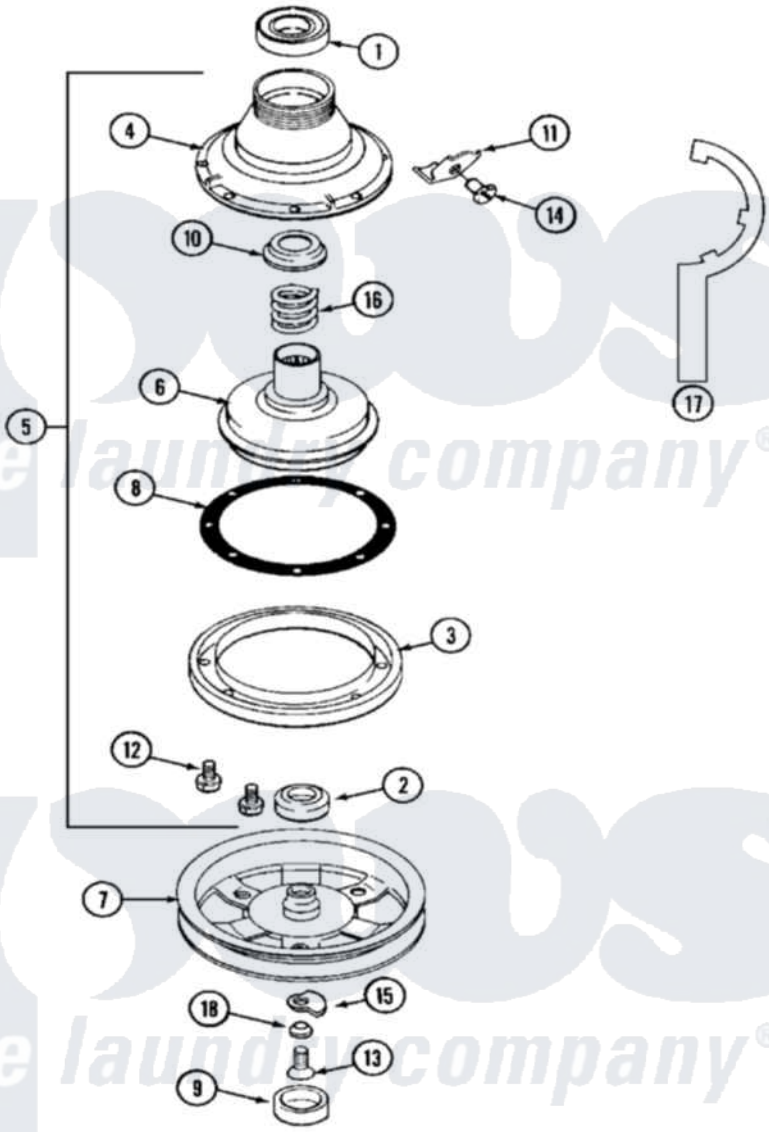

Maytag Residential Maytag MAT10PDABW Washer Parts Parts Diagram 08 - CLUTCH, BRAKE & BELTS
Click on the part number to view part

Item	Original Part Number	Replaced By	Status	Part Description
001	Y200720	22003441		Bearing, Rear
002	200835			Bearing, Brake Rotor
003	211043	6-2011900		Brake Asse
004	211045	6-2011900		Brake Asse
005	201190	6-2011900		Brake Asse
006	201126	6-2011900		Brake Asse
007	211059	6-2301530		Pulley
008	211042	6-2011900		Brake Asse
009	NLA		Not Available	CAP, OIL RETAINER
010	211039	6-2011900		Brake Asse
011	213325			Clip, Retaining
012	211000			SCREW, BRAKE DRUM (HEX HEAD)
013	211375	681582		Screw
014	213326			Bolt, Sems Retaining Clip
015	211089			Lug, Stop Pulley
016	211041	6-2011900		Brake Asse

017	Y038315	038315	Tool
018	211090	22003555	Washer, Stop Lug

the laundry company®
the laundry company®
the laundry company®