Maytag MAT12PDABW 10 - CABINET (MAT12PDAG/PDEG/PSAG)

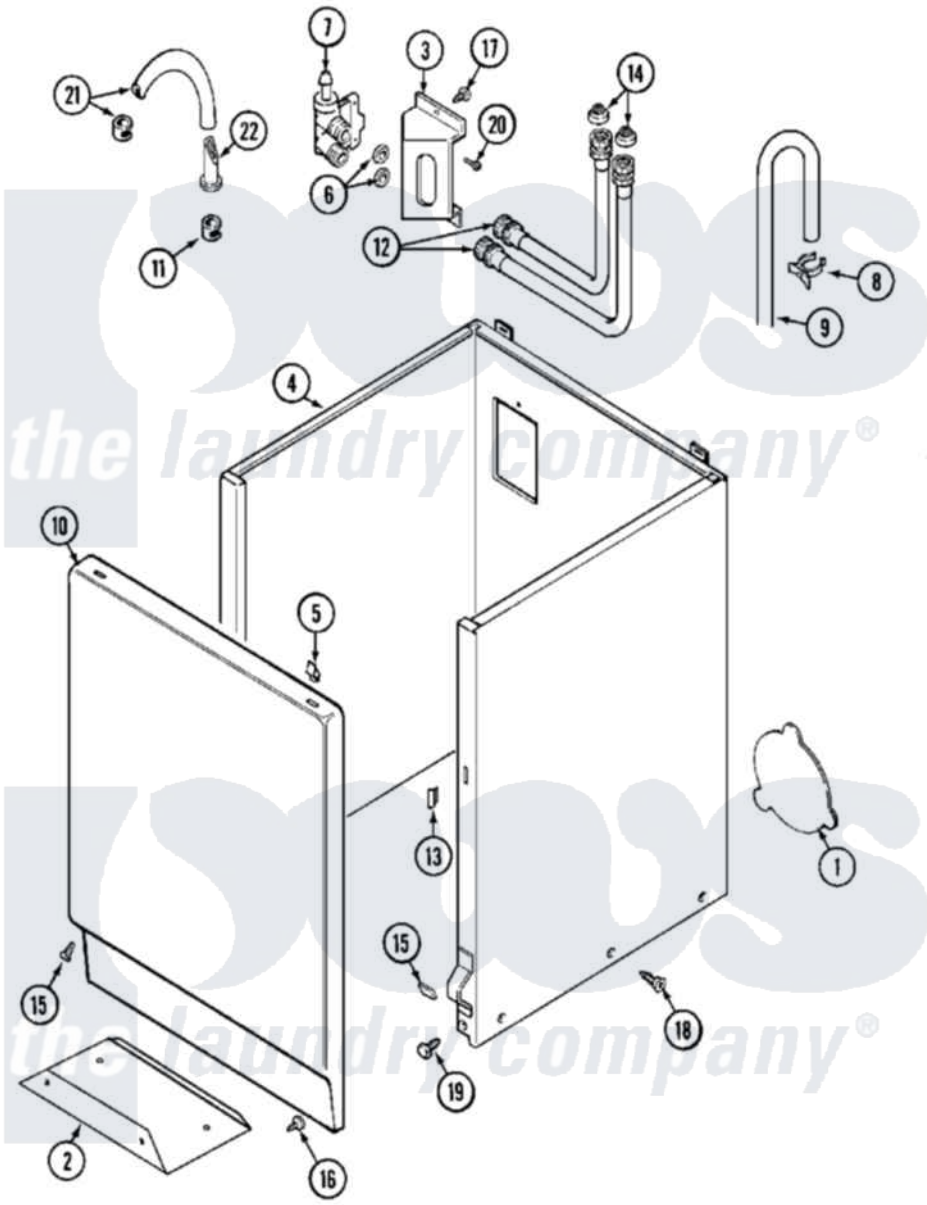

Maytag Residential Maytag MAT12PDABW Washer Parts Parts Diagram 10 - CABINET (MAT12PDAG/PDEG/PSAG)
Click on the part number to view part

Item	Original Part Number	Replaced By	Status	Part Description
001	211294	90767		Screw, 8A X 3/8 HeX Washer Head Tapping
"	212985	22002924		Plate, Access
"	NLA		Not Available	PLATE, ACCESS
002	213846			Guard, Belt
003	214812	22002361		Bracket, Water Valve
"	22003217	3370225		Screw
004	22001995			Screw Note: Screw, Tumbler Front And Shroud
"	22002381			V-Bracket
"	22002382			Fastener, V-Bracket
"	NLA		Not Available	CABINET (WHT)
005	22001650			Fastener, Spring
006	Y013783			Washer, Inlet Hose
007	205161	489503		Clamp
"	214337	96160		Screen
"	22001604			Valve, Water 120V 60Hz

008	22001815	22002765		Clip, Hose
009	22001816			Hose, Drain
"	22002700	22003410		Hose, Drain
"	22002701	22003814		Retainer, Drain Hose
010	22001803		Not Available	PANEL, FRONT (WHT)
"	33001268		Not Available	PAD, DOOR
011	205161	489503		Clamp
012	208100	76313		Hosefill
013	214376	22002331		Spacer, Front Panel
014	200961	12001413		Strainer And Washer Kit
015	213325			Clip, Retaining
"	22001496			Front Panel Fastener And Screw
016	211294	90767		Screw, 8A X 3/8 HeX Washer Head Tapping
017	212276	W10116760		Screw
018	213007			Xfor Cabinet See Cabinet, Back
019	213121	3400111		Screw, 12-14 X 5/8
"	213122	27001200		Screw
020	Y313561			Screw----NA
021	22001608	22001954		Injector Hose And Clamp Kit
022	22001900			Preventer, Back Flow

the laundry company®