Maytag MAV308DAWW 02 - CABINET & FRONT PANEL

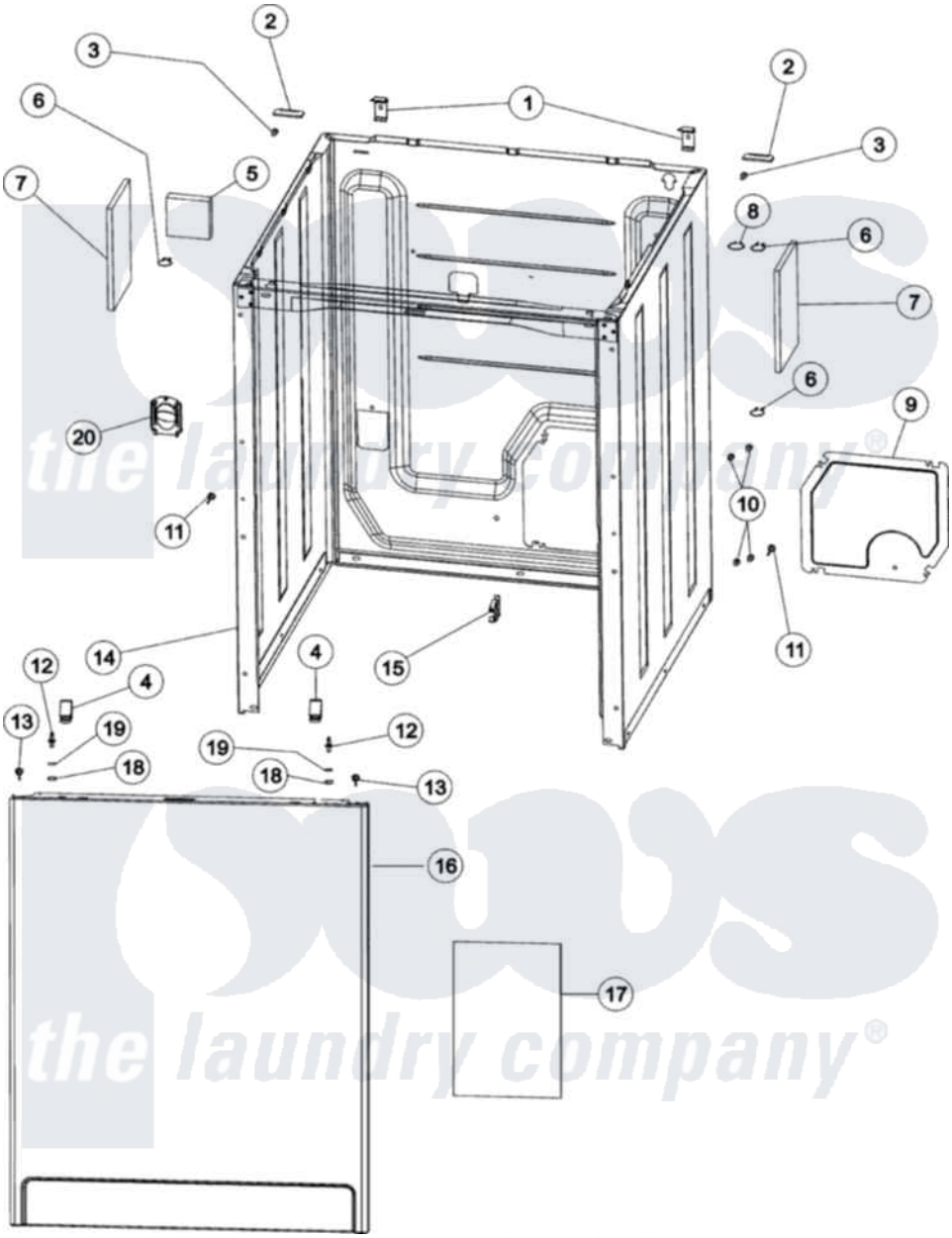

Maytag Residential Maytag MAV308DAWW Washer Parts Parts Diagram 02 - CABINET & FRONT PANEL
Click on the part number to view part

Item	Original Part Number	Replaced By	Status	Part Description
1	35-2846			Hinge, Cabinet Top
2	35-4128			Pad, Hinge
3	25-7732	681414		Screw, 10AB X 1/2
4	25-7220			Clip, Cabinet Top
5	35-0706		Not Available	PAD, FOAM
6	31001320	16515		Clip
7	21002011			Pad, Cabinet
8	25-7430			Clip, Wiring Harness
9	21001527			Shield, Rear
10	25-7733	681414		Screw, 10AB X 1/2
11	21001829			Post, Locating
12	53-0643			Pin, Locator
"	21001874			Outlet, Drain Hose
13	25-7732	681414		Screw, 10AB X 1/2
14	21001871			Cabinet
15	22002765			Clip, Hose

16	35-2084		Panel, Front
17	21001281		Damper, Sound Pad
18	25-0224	3400029	Nut, Adapter Plate
19	35-4129		Bumper, Cabinet
20	21001874		Outlet, Drain Hose

the laundry company®

the laundry company®

the laundry company®