Maytag MDE12CSAGW 01 - CONTROL PANEL

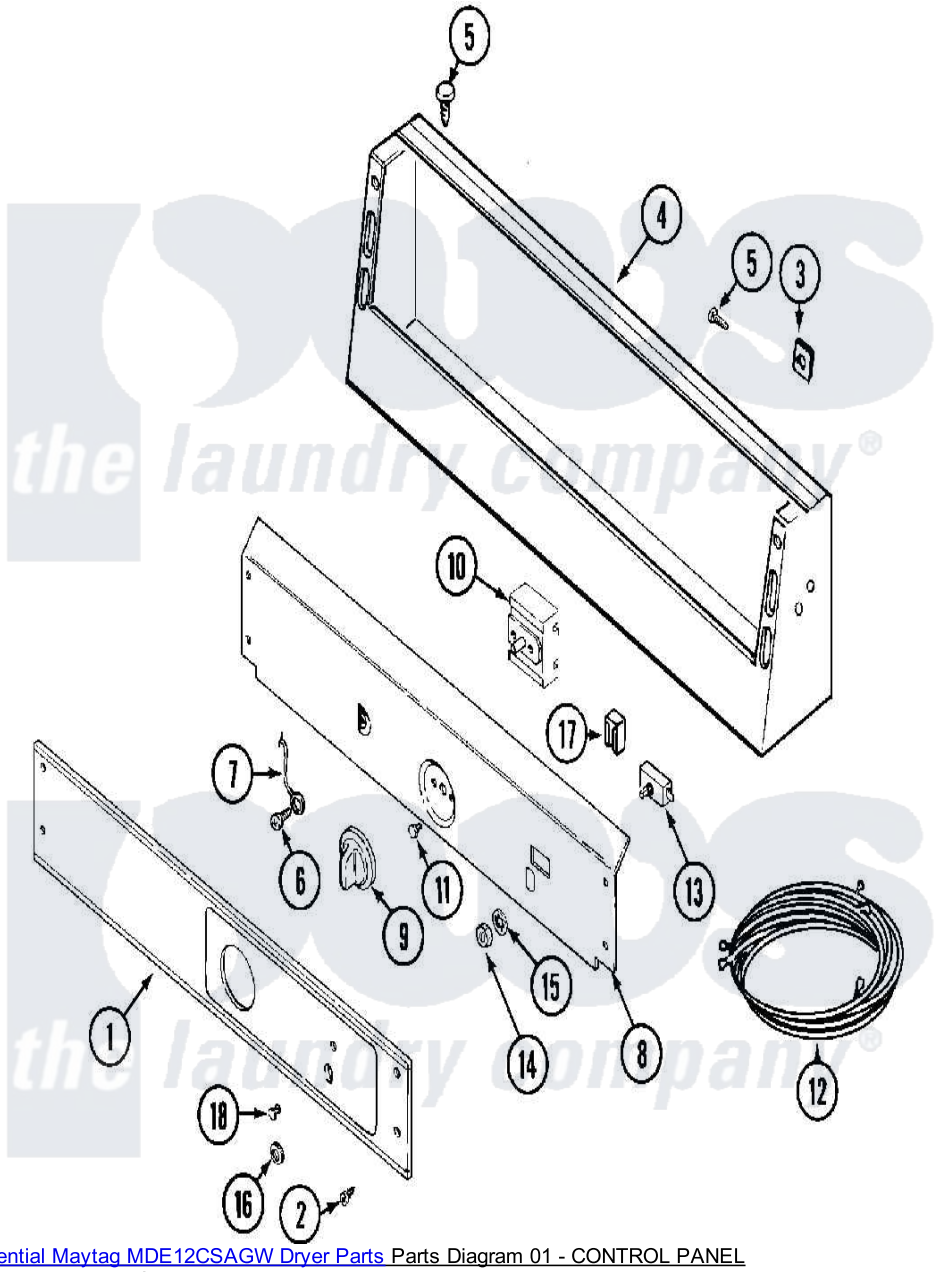

Maytag Residential Maytag MDE12CSAGW Dryer Parts Parts Diagram 01 - CONTROL PANEL
Click on the part number to view part

Item	Original Part Number	Replaced By	Status	Part Description
001	33001707			PANEL, CONTROL
002	215506			Screw, Control Panel Overlay
003	215003			Fastener, Panel And Bracket
004	NLA		Not Available	CONSOLE (WHT)
005	212276	W10116760		Screw
006	211252			Screw, Ground Wire
007	205810			Wire, Ground
008	314912		Not Available	BRACKET, CONTROL PANEL (WHT)
009	306938			Knob, Selector Switch
010	307237	W10327105		Switch, Cycle Selection
011	Y313588	488234		Screw 8-32 X 1/4
012	33001531			Harness, Wire
"	33001563			Harness, Wire
013	306940	W10149462		Switch, Push-To-Start
014	Y312706	422617		Nut
015	312751			Lockwasher, Start Switch

016	Y312702		Knurled Nut, Start Switch
017	22001365	W10139459	Lamp-Indicator 230 V.
018	215564		Lens, Indicator Light

the laundry company®
the laundry company®
the laundry company®