Maytag MDE12MNAGW 01 - CONTROL PANEL

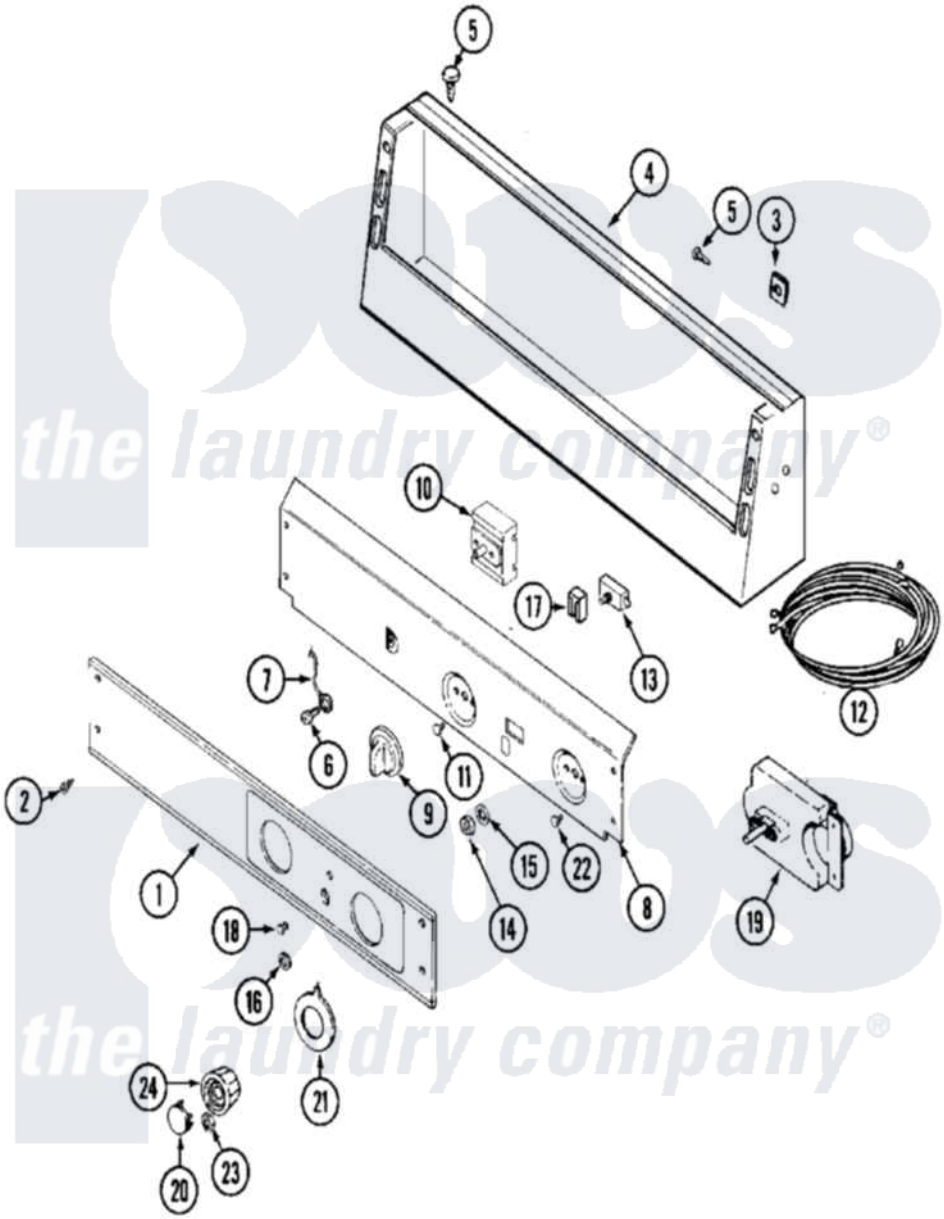

Maytag Residential Maytag MDE12MNAGW Dryer Parts Parts Diagram 01 - CONTROL PANEL
Click on the part number to view part

Item	Original Part Number	Replaced By	Status	Part Description
001	33001710			Panel, Control
002	215506			Screw, Control Panel Overlay
003	215003			Fastener, Panel And Bracket
004	33001280			Console
005	212276	W10116760		Screw
006	211252			Screw, Ground Wire
007	205810			Wire, Ground
008	NLA		Not Available	BRACKET, CONTROL PANEL (WHT)
009	306938			Knob, Selector Switch
010	307237	W10327105		Switch, Cycle Selection
011	Y313588	488234		Screw 8-32 X 1/4
012	33001514			Wire Harness, Main
"	33001562			Harness, Wire
013	306940	W10149462		Switch, Push-To-Start
014	Y312706	422617		Nut
015	312751			Lockwasher, Start Switch

016	Y312702			Knurled Nut, Start Switch
017	204075		Not Available	PILOT LAMP (DG MODELS ONLY)
"	22001365	W10139459		Lamp-Indicator 230 V.
018	215564			Lens, Indicator Light
019	305214			Timer
"	305215	305214		Timer
"	Y305758			Timer 240-50
020	314723	W10133501		Cap, Knob
021	33001500			Dial, Timer Indicator
022	Y313588	488234		Screw 8-32 X 1/4
023	312273			Nut, Control Knob
024	314724			Knob For Timer

the laundry company®
the laundry company®
the laundry company®